IHB EN 2004-1
531675

INSTALLATION MANUAL

# Ground source heat pump NIBE F1245

NIBE

## Quick guide

*Navigation*

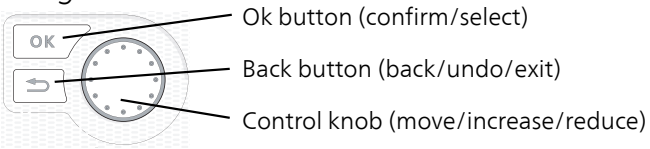


A detailed explanation of the button functions can be found on page 38.

How to scroll through menus and make different settings is described on page 41.

*Set the indoor climate*

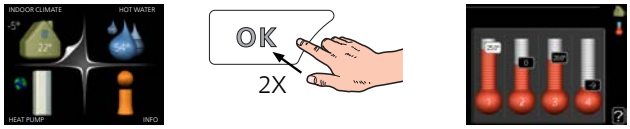


The mode for setting the indoor temperature is accessed by pressing the OK button twice, when in the start mode in the main menu.

*Increase hot water volume*

To temporarily increase the amount of hot water, first turn the control knob to mark menu 2 (water droplet) and then press the OK button twice.

# Table of Contents


*1 Important information* — *4*
- Safety information — 4
- Symbols — 4
- Marking — 4
- Serial number — 5
- Recovery — 5
- Environmental information — 5
- Inspection of the installation — 6

*2 Delivery and handling* — *7*
- Transport — 7
- Assembly — 7
- Supplied components — 8
- Removing the covers — 8
- Removing parts of the insulation — 9

*3 The heat pump design* — *10*
- General — 10
- Distribution boxes — 12
- Cooling section (EP14) — 14

*4 Pipe connections* — *16*
- General — 16
- Dimensions and pipe connections — 17
- Brine side — 18
- Heating medium side — 18
- Cold and hot water — 19
- Docking alternatives — 19

*5 Electrical connections* — *21*
- General — 21
- Connections — 23
- Settings — 25
- Optional connections — 26
- Connecting accessories — 30

*6 Commissioning and adjusting* — *32*
- Preparations — 32
- Filling and venting — 32
- Start-up and inspection — 33
- Setting the heating curve — 36

*7 Control - Introduction* — *38*
- Display unit — 38
- Menu system — 39

*8 Control - Menus* — *43*
- Menu 1 - INDOOR CLIMATE — 43
- Menu 2 - HOT WATER — 43
- Menu 3 - INFO — 43
- Menu 4 - HEAT PUMP — 45
- Menu 5 - SERVICE — 46

*9 Service* — *59*
- Service actions — 59

*10 Disturbances in comfort* — *66*
- Manage alarm — 66

*11 Accessories* — *69*

*12 Technical data* — *71*
- Dimensions and setting-out coordinates — 71
- Electrical data — 72
- Technical specifications — 73
- Energy labelling — 75

*Item register* — *80*

*Contact information* — *83*

# 1 Important information

## Safety information

This manual describes installation and service procedures for implementation by specialists.

The manual must be left with the customer.

This appliance can be used by children aged from 8 years and above and persons with reduced physical, sensory or mental capabilities or lack of experience and knowledge if they have been given supervision or instruction concerning use of the appliance in a safe way and understand the hazards involved. Children shall not play with the appliance. Cleaning and user maintenance shall not be made by children without supervision.

Rights to make any design or technical modifications are reserved.

©NIBE 2020.

Water may drip from the safety valve's overflow pipe. The entire length of the overflow water pipe must be routed to a suitable drain and be inclined to prevent water pockets, and must also be frost-proof. The overflow pipe must be at least the same size as the safety valve. The overflow pipe must be visible and its mouth must be open and not located close to electrical components.

F1245 must be installed via an isolator switch. The cable area has to be dimensioned based on the fuse rating used.

## Symbols

*NOTE*

This symbol indicates danger to person or machine .

*Caution*

This symbol indicates important information about what you should consider when installing or servicing the installation.

*TIP*

This symbol indicates tips on how to facilitate using the product.

## Marking

**CE** The CE mark is obligatory for most products sold in the EU, regardless of where they are made.

**IPX1B** Classification of enclosure of electro-technical equipment.

Danger to person or machine.

Read the User Manual.

# Serial number

The serial number can be found at the bottom right of the front cover, in the info menu (menu 3.1) and on the type plate (PZ1).

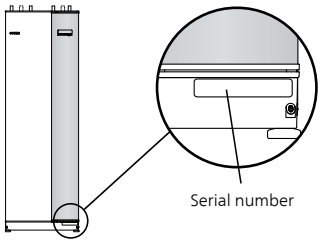


*Caution*

You need the product's ((14 digit) serial number for servicing and support.

# Recovery

Leave the disposal of the packaging to the installer who installed the product or to special waste stations.

Do not dispose of used products with normal household waste. It must be disposed of at a special waste station or dealer who provides this type of service.

Improper disposal of the product by the user results in administrative penalties in accordance with current legislation.

# Environmental information

## F-GAS REGULATION (EU) NO. 517/2014

This unit contains a fluorinated greenhouse gas that is covered by the Kyoto agreement.

The equipment contains R407C, a fluorinated greenhouse gas with a GWP value (Global Warming Potential) of 1,774. Do not release R407C into the atmosphere.

# Inspection of the installation

Current regulations require the heating installation to be inspected before it is commissioned. The inspection must be carried out by a suitably qualified person.

In addition, fill in the page for the installation data in the User Manual.

| ✔ | *Description* | *Notes* | *Signa-ture* | *Date* |
|---|---|---|---|---|
| Brine (page 18) | | | | |
| | System flushed | | | |
| | System vented | | | |
| | Antifreeze | | | |
| | Level/Expansion vessel | | | |
| | Particle filter | | | |
| | Safety valve | | | |
| | Shut off valves | | | |
| | Circulation pump setting | | | |
| Heating medium (page 18) | | | | |
| | System flushed | | | |
| | System vented | | | |
| | Expansion vessel | | | |
| | Particle filter | | | |
| | Safety valve | | | |
| | Shut off valves | | | |
| | Circulation pump setting | | | |
| Electricity (page 21) | | | | |
| | Connections | | | |
| | Main voltage | | | |
| | Phase voltage | | | |
| | Fuses heat pump | | | |
| | Fuses property | | | |
| | Outside sensor | | | |
| | Room sensor | | | |
| | Current sensor | | | |
| | Safety breaker | | | |
| | Earth circuit-breaker | | | |
| | Setting of emergency mode thermo-stat | | | |

# 2 Delivery and handling

## Transport

F1245 should be transported and stored vertically in a dry place. When being moved into a building, F1245 may be leant back 45 °.

Ensure that F1245 has not been damaged during transport.

> *Caution*
>
> The product can be tail heavy.

Remove the outer panels in order to protect them when moving in confined spaces inside buildings.

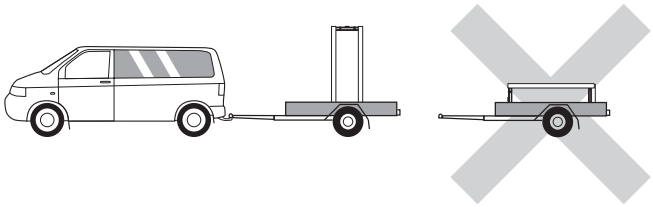

### EXTRACTING THE COOLING MODULE

To simplify transport and service, the heat pump can be separated by pulling the cooling module out from the cabinet.

See page 62 for instructions about the separation.

## Assembly

- Place F1245 on a solid foundation indoors that can take the heat pump's weight. Use the product's adjustable feet to obtain a horizontal and stable set-up.

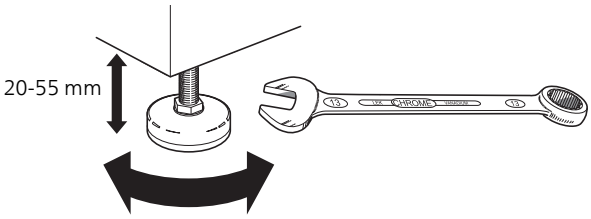


- Because water comes from F1245, the area where the heating pump is located must be equipped with floor drainage.
- Install with its back to an outside wall, ideally in a room where noise does not matter, in order to eliminate noise problems. If this is not possible, avoid placing it against a wall behind a bedroom or other room where noise may be a problem.
- Wherever the unit is located, walls to sound sensitive rooms should be fitted with sound insulation.
- Route pipes so they are not fixed to an internal wall that backs on to a bedroom or living room.

### INSTALLATION AREA

Leave a free space of 800 mm in front of the product. Approx. 50 mm free space is required on each side, to remove the side panels (see image). The panels do not need to be removed during service. All service on F1245 can be carried out from the front. Leave space between the heat pump and the wall behind (and any routing of supply cables and pipes) to reduce the risk of any vibration being propagated.

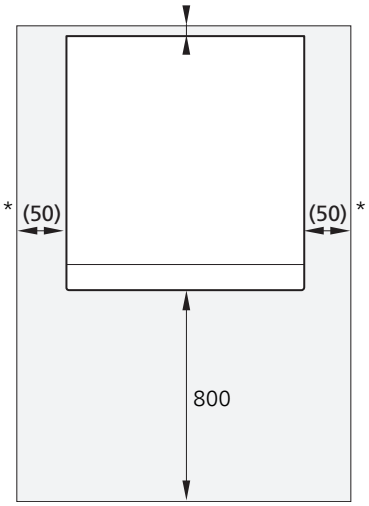


* A normal installation needs 300 – 400 mm (any side) for connection equipment, i.e. level vessel, valves and electrical equipment.

# Supplied components

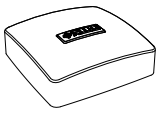

Outside sensor

1 x

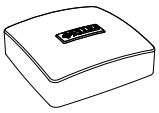

Room sensor

1 x

Current sensor

3 x

Safety valve
0.3 MPa (3 bar)

1 x

O-rings

8 x

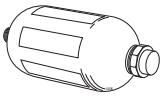

Level vessel

1 x

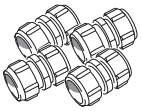

Compression ring couplings

*6-10 kW*

2 x (ø28 x G25)
3 x (ø22 x G20)

*12 – 15 kW*

5 x (ø28 x G25)

*17 kW*

3 x (ø28 x G25)
2 x (ø35 x G32)

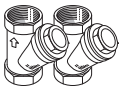

Particle filter

*6 – 10 kW*

1 x G1
1 x G3/4

*12 kW*

1 x G1

1 pcs G1 1/4

## LOCATION

The kit of supplied items is placed in packaging on top of the heat pump.

# Removing the covers

## FRONT COVER

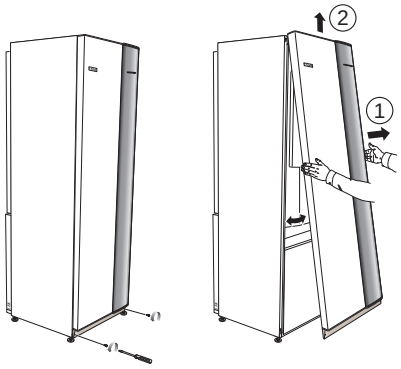


1. Remove the screws from the lower edge of the front panel.
2. Lift the panel out at the bottom edge and up.

## SIDE COVERS

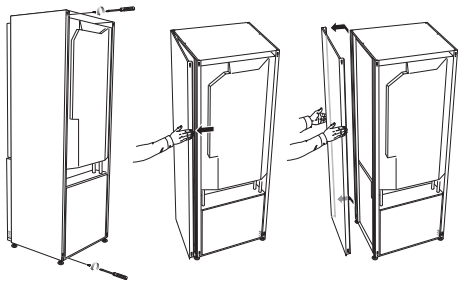

The side covers can be removed to facilitate the installation.

1. Remove the screws from the upper and lower edges.
2. Twist the cover slightly outward.
3. Move the hatch outwards and backwards.
4. Assembly takes place in the reverse order.

# Removing parts of the insulation

Parts of the insulation can be removed to facilitate the installation.

## INSULATION, TOP

1. Disconnect the cable from the motor and remove the motor from the shuttle valve as illustrated.

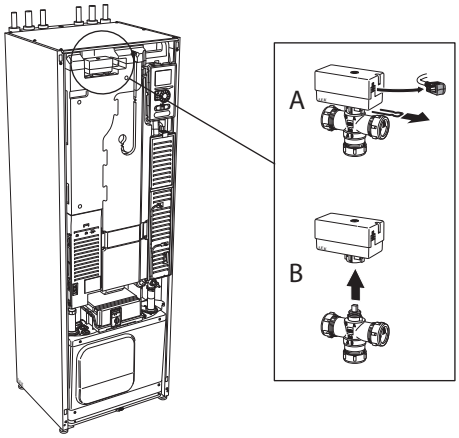


2. Grip the handle and pull straight out as illustrated.

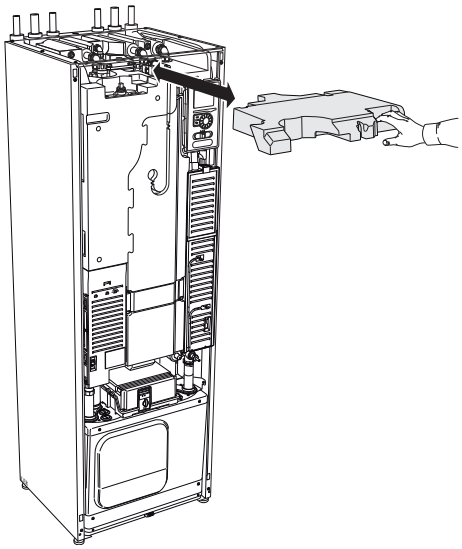

## INSULATION, IMMERSION HEATER

*NOTE*

Electrical installation and service must be carried out under the supervision of a qualified electrician. Electrical installation and wiring must be carried out in accordance with the stipulations in force.

1. Remove the cover for the junction box according to the description on page 22.
2. Grip the handle and pull the insulation carefully towards you as illustrated.

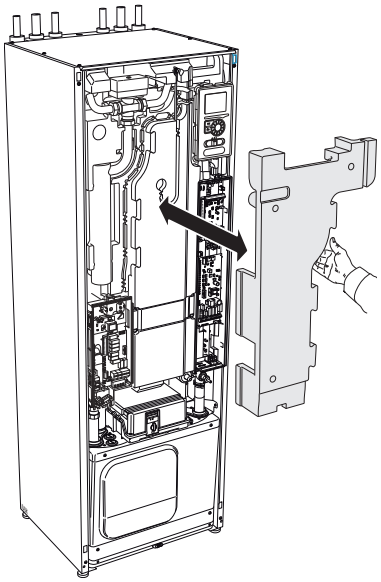

# 3 The heat pump design

## General

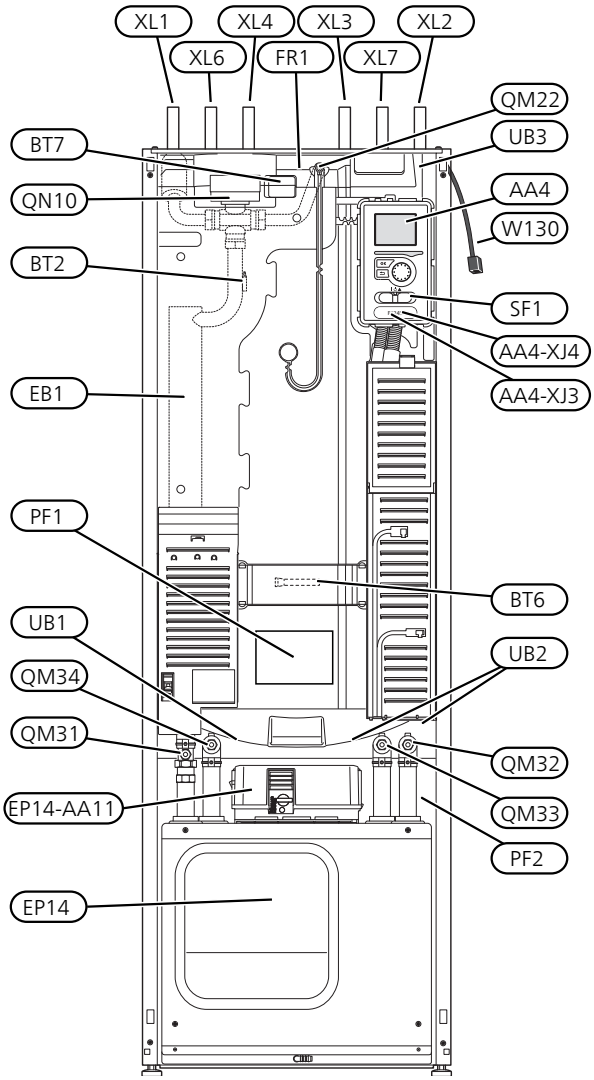


VIEW FROM ABOVE

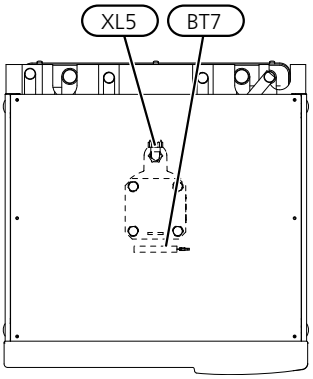


VIEW FROM BEHIND

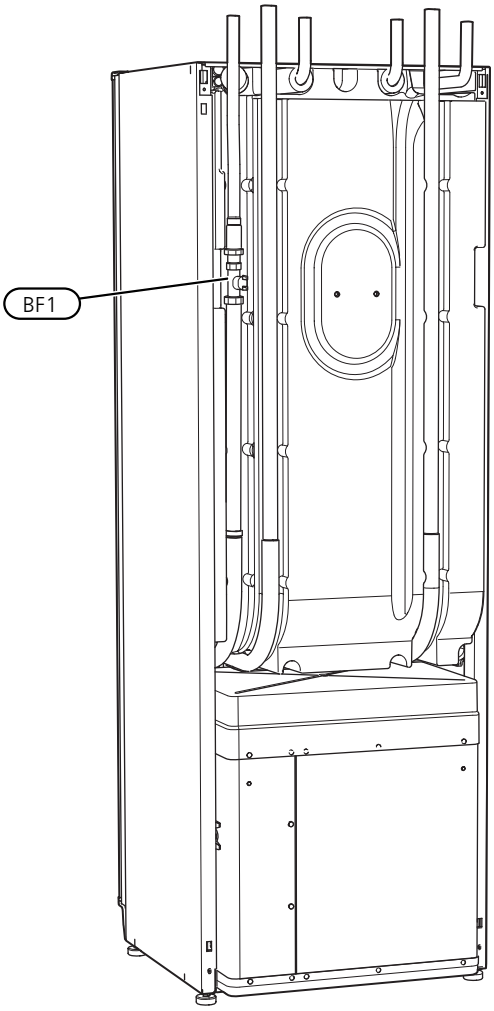

## PIPE CONNECTIONS

| | |
|---|---|
| XL1 | Connection, heating medium flow |
| XL2 | Connection, heating medium return |
| XL3 | Connection, cold water |
| XL4 | Connection, hot water |
| XL5 | Connection, HWC* |
| XL6 | Connection, brine in |
| XL7 | Connection, brine out |

* Only heat pumps with enamelled or stainless steel vessel.

## HVAC COMPONENTS

| | |
|---|---|
| QM22 | Venting, coil |
| QM31 | Shut-off valve, heating medium flow |
| QM32 | Shut off valve, heating medium return |
| QM33 | Shut off valve, brine out |
| QM34 | Shut-off valve, brine in |
| QN10 | Shuttle valve, climate system/water heater |

## SENSORS ETC.

| | |
|---|---|
| BF1 | Flow meter** |
| BT1 | Outdoor temperature sensor* |
| BT2 | Temperature sensors, heating medium flow |
| BT6 | Temperature sensor, hot water charging |
| BT7 | Temperature sensor, hot water top |

**Only heat pumps with energy meter
* Not illustrated

## ELECTRICAL COMPONENTS

| | |
|---|---|
| AA4 | Display unit |
| | AA4-XJ3 USB socket |
| | AA4-XJ4 Service outlet (No function) |
| AA11 | Motor module |
| EB1 | Immersion heater |
| FR1 | El. anode* |
| SF1 | Switch |
| W130 | Network cable for NIBE Uplink |

* Only heat pump with enamelled vessel.

## MISCELLANEOUS

| | |
|---|---|
| EP14 | Cooling section |
| PF1 | Rating plate |
| PF2 | Type plate, cooling section |
| UB1 | Cable gland, incoming electricity |
| UB2 | Cable gland |
| UB3 | Cable gland, rear side, sensor |

Designations according to standard EN 81346-2.

# Distribution boxes

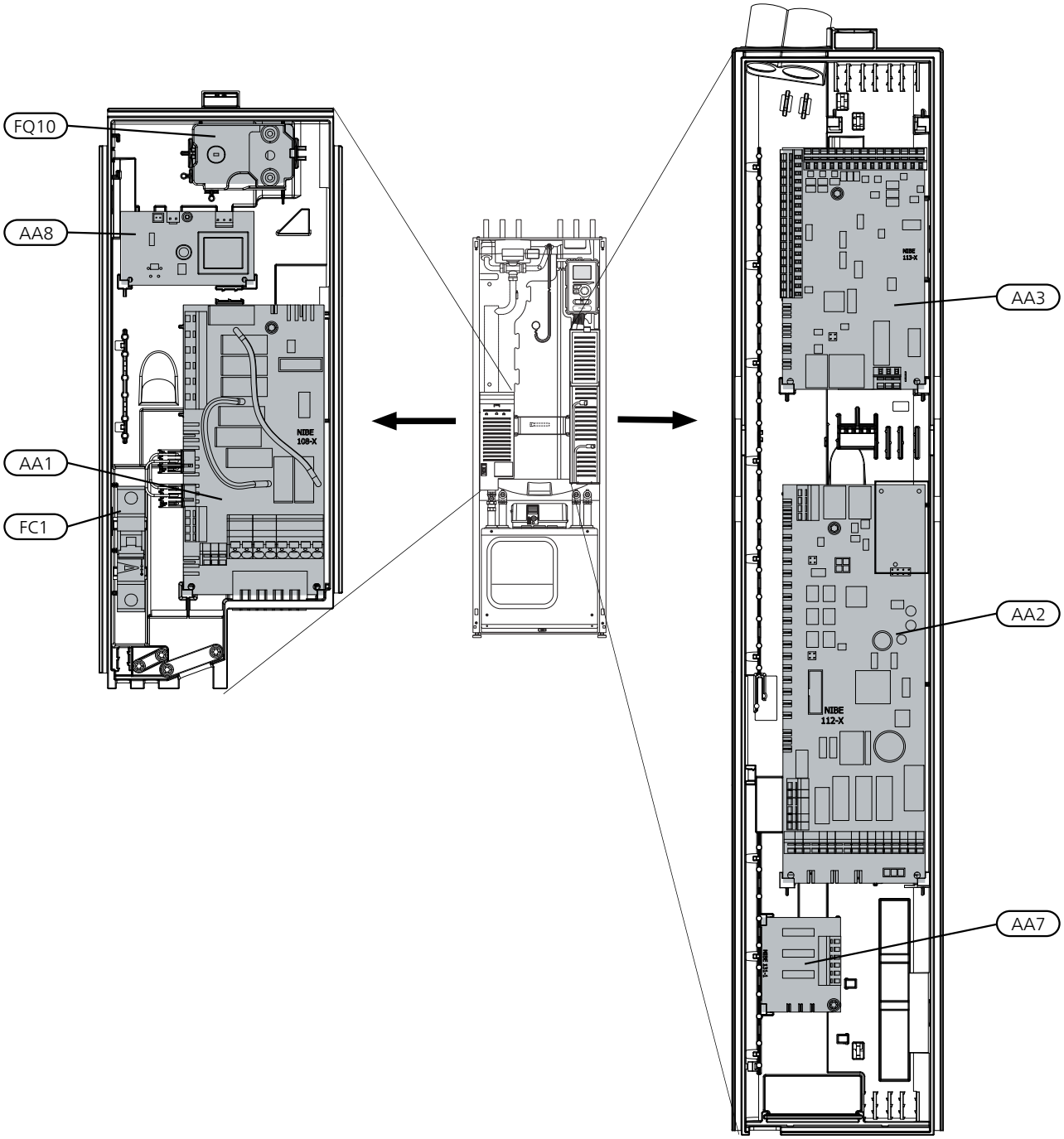


## ELECTRICAL COMPONENTS

| | |
|---|---|
| AA1 | Immersion heater card |
| AA2 | Base card |
| AA3 | Input circuit board |
| AA7 | Extra relay circuit board[1] |
| AA8 | Electrical anode board[2] |
| FC1 | Miniature circuit-breaker |
| FQ10 | Temperature limiter/Emergency mode thermostat |

1 Only for F1145PC and F1245PC

2 Only heat pump with enamelled vessel.

## MOTOR MODULE (AA11)

*3X400 V 6-10 kW*

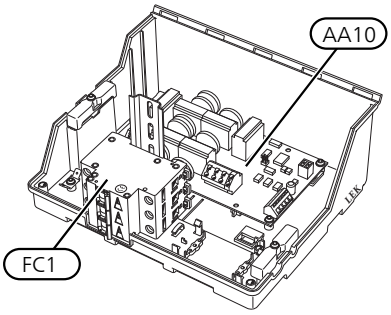


*3x400V 12 kW*

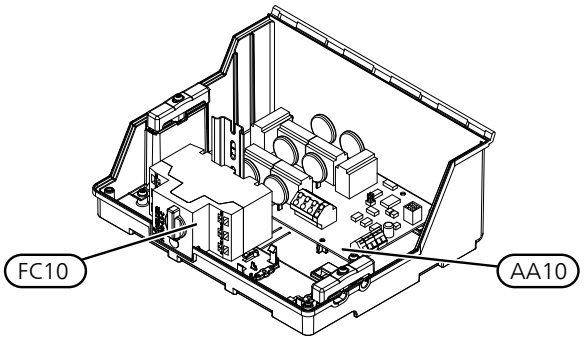


## ELECTRICAL COMPONENTS

| | |
|---|---|
| AA10 | Soft-start card |
| FC1 | Miniature circuit-breaker |
| FC10 | Motor cut-out |

# Cooling section (EP14)

*6 - 8 kW*

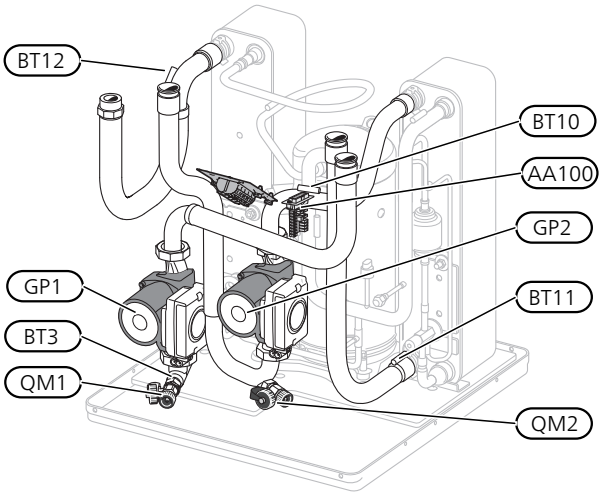


*10 kW*

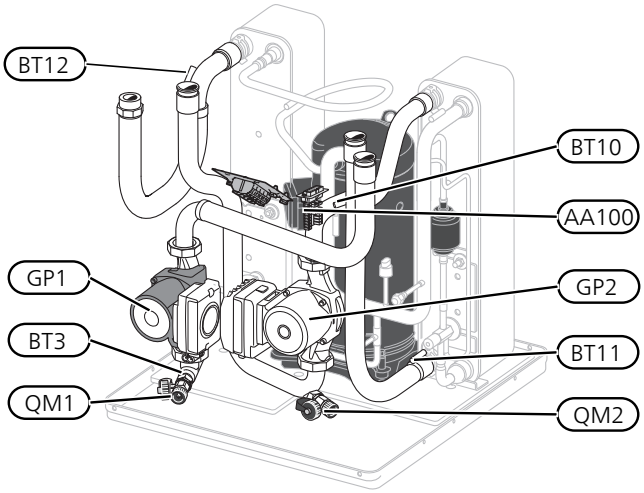


*12 kW*

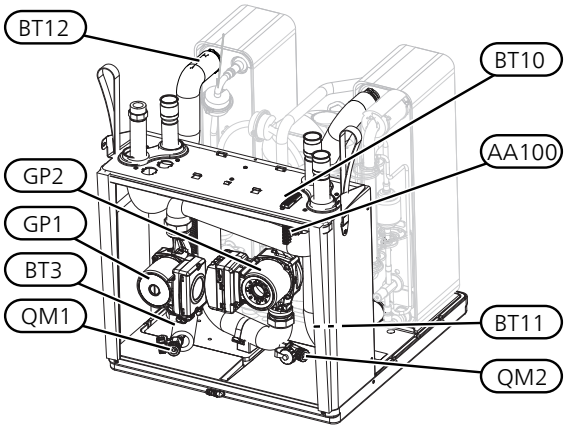


*6-10 kW*

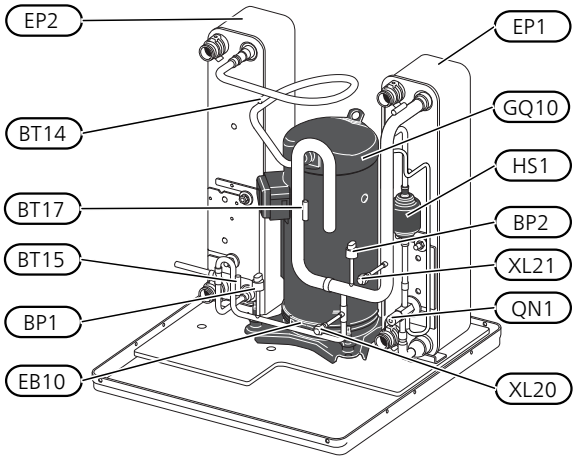


*12 kW*

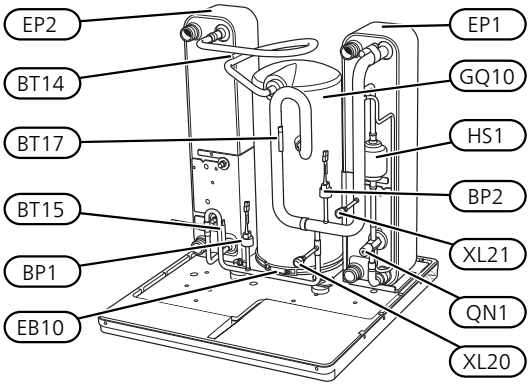

## PIPE CONNECTIONS

| | |
|---|---|
| XL20 | Service connection, high pressure |
| XL21 | Service connection, low pressure |

## HVAC COMPONENTS

| | |
|---|---|
| GP1 | Circulation pump |
| GP2 | Brine pump |
| QM1 | Drainage, climate system |
| QM2 | Draining, brine side |

## SENSORS ETC.

| | |
|---|---|
| BP1 | High pressure pressostat |
| BP2 | Low pressure pressostat |
| BT3 | Temperature sensors, heating medium return |
| BT10 | Temperature sensor, brine in |
| BT11 | Temperature sensor, brine out |
| BT12 | Temperature sensor, condenser supply line |
| BT14 | Temperature sensor, hot gas |
| BT15 | Temperature sensor, fluid pipe |
| BT17 | Temperature sensor, suction gas |

## ELECTRICAL COMPONENTS

| | |
|---|---|
| AA100 | Joint card |
| EB10 | Compressor heater |

## COOLING COMPONENTS

| | |
|---|---|
| EP1 | Evaporator |
| EP2 | Condenser |
| GQ10 | Compressor |
| HS1 | Drying filter |
| QN1 | Expansion valve |

# 4 Pipe connections

## General

Pipe installation must be carried out in accordance with current norms and directives. F1245 can operate with a return temperature of up to 58 °C and an outgoing temperature from the heat pump of 70 (65 °C with only the compressor).

F1245 is not equipped with external shut off valves; these must be installed to facilitate any future servicing.

*Caution*

Ensure that incoming water is clean. When using a private well, it may be necessary to supplement with an extra water filter.

*Caution*

Any high points in the climate system, must be equipped with air vents.

*NOTE*

The pipe systems need to be flushed out before the heat pump is connected so debris cannot damage component parts.

*NOTE*

Water may drip from the safety valve's overflow pipe. The entire length of the overflow water pipe must be routed to a suitable drain and be inclined to prevent water pockets, and must also be frost-proof. The overflow pipe must be at least the same size as the safety valve. The overflow pipe must be visible and its mouth must be open and not located close to electrical components.

### SYMBOL KEY

| *Symbol* | *Meaning* |
|---|---|
| | Venting valve |
| | Shut-off valve |
| | Non-return valve |
| | Circulation pump |
| | Expansion vessel |
| | Auxiliary relay |
| | Compressor |
| | Pressure gauge |
| | Level vessel |
| | Particle filter |
| | Safety valve |
| | Temperature sensor |
| | Trim valve |
| | Reversing valve/shunt |
| | Heat exchanger |

## SYSTEM DIAGRAM

F1245 consists of a heat pump, water heater, electrical module, circulation pumps and a control system. F1245 is connected to the brine and heating medium circuits.

In the heat pump evaporator, the brine (water mixed with anti-freeze, glycol or ethanol) releases its energy to the refrigerant, which is vaporised in order to be compressed in the compressor. The refrigerant, of which the temperature has now been raised, is passed to the condenser where it gives off its energy to the heating medium circuit and, if necessary, to the water heater. If there is a greater need for heating/hot water than the compressor can provide there is an integrated immersion heater.

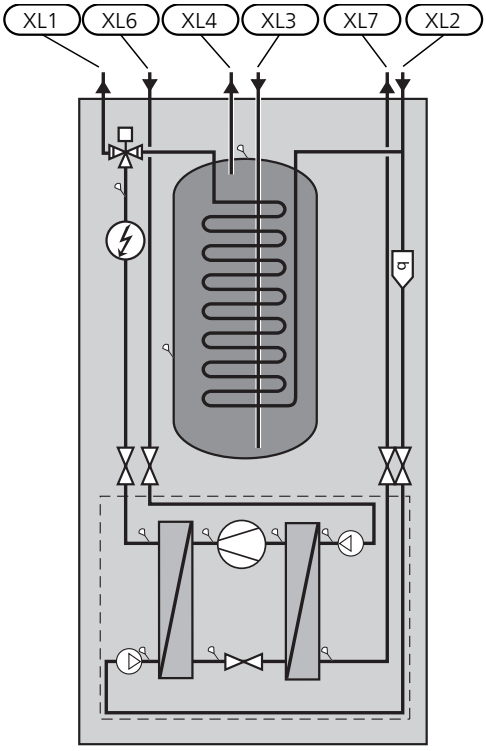


| | |
|---|---|
| XL1 | Connection, heating medium flow |
| XL2 | Connection, heating medium return |
| XL3 | Connection, cold water |
| XL4 | Connection, hot water |
| XL6 | Connection, brine in |
| XL7 | Connection, brine out |

# Dimensions and pipe connections

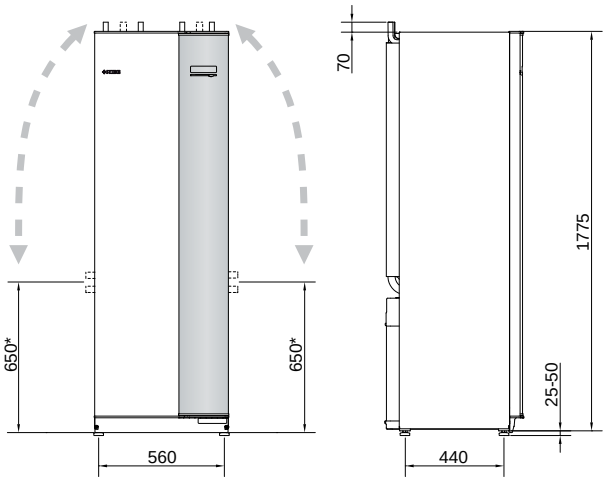


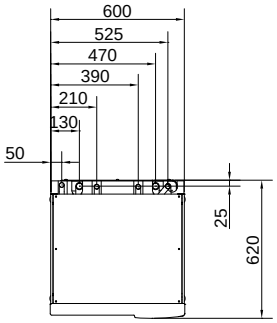


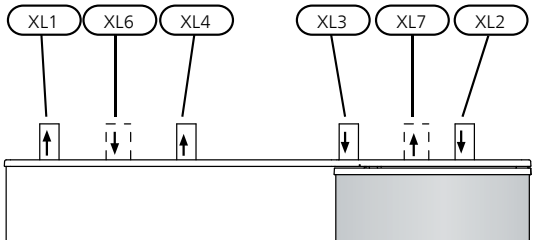


## PIPE DIMENSIONS

| *Connection* | *(kW)* | *6-10* | *12* |
|---|---|---|---|
| (XL6)/(XL7) Brine in/out ext Ø | (mm) | 28 | |
| (XL1)/(XL2) Heating medium flow/return ext Ø | (mm) | 22 | 28 |
| (XL3)/(XL4) Cold/hot water Ø | (mm) | 22 | |

* Can be angled for side connection.

# Brine side

## COLLECTOR

*Caution*

The length of the collector hose varies depending on the rock/soil conditions, climate zone and on the climate system (radiators or underfloor heating) and the heating requirement of the building Each installation must be sized individually.

Max. length per coil for the collector should not exceed 400 m.

In those cases where it is necessary to have several collectors, these should be connected in parallel with the possibility for adjusting the flow of the relevant coil.

For surface soil heat, the hose should be buried at a depth determined by local conditions and the distance between the hoses should be at least 1 metre.

For several bore holes, the distance between the holes must be determined according to local conditions.

Ensure the collector hose rises constantly towards the heat pump to avoid air pockets. If this is not possible, airvents should be used.

Because the temperature of the brine system can fall below 0 °C, it must be protected against freezing down to -15 °C. When making the volume calculation, use 1 litres of ready mixed brine per metre of collector hose (applies when using PEM-hose 40x2.4 PN 6.3) as a guide value.

## SIDE CONNECTION

It is possible to angle the brine connections, for connection to the side instead of top connection.

To angle out a connection:

1. Disconnect the pipe at the top connection.
2. Angle the pipe in the desired direction.
3. If necessary, cut the pipe to the desired length.

## CONNECTING THE BRINE SIDE

- Insulate all indoor brine pipes against condensation.
- The level vessel must be installed as the highest point in the brine system on the incoming pipe before the brine pump (Alt. 1).

  If the level vessel cannot be placed at the highest point, an expansion vessel must be used (Alt. 2).

*NOTE*

Note that condensation may drip from the level vessel. Position the vessel so that this does not harm other equipment.

- Details of the antifreeze used must be shown on the level vessel.
- Install the enclosed safety valve below the level vessel as illustrated.
- Install shut off valves as close to the heat pump as possible.
- Fit the enclosed particle filter on the incoming brine.

*TIP*

If filling connection KB25/KB32 is used, the enclosed filterball does not need to be fitted.

In the case of connection to an open groundwater system, an intermediate frost-protected circuit must be provided, because of the risk of dirt and freezing in the evaporator. This requires an extra heat exchanger.

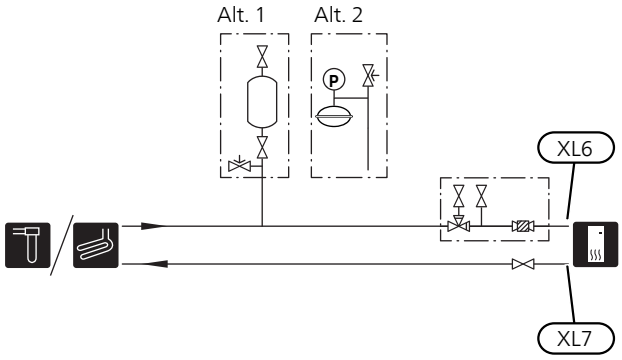


# Heating medium side

## CONNECTING THE CLIMATE SYSTEM

A climate system is a system that regulates indoor comfort with the help of the control system in F1245 and for example radiators, underfloor heating/cooling, fan convectors etc.

- Install all required safety devices, shut-off valves (as close to the heat pump as possible), and supplied particle filter.

- Fit safety valve on heating medium return as illustrated. Recommended opening pressure is 0.25 MPa (2.5 bar). For information about max opening pressure, see technical specifications.
- When connecting to a system with thermostats on all radiators (or underfloor heating coils), either a bypass valve must be fitted or some of the thermostats must be removed to ensure there is sufficient flow.

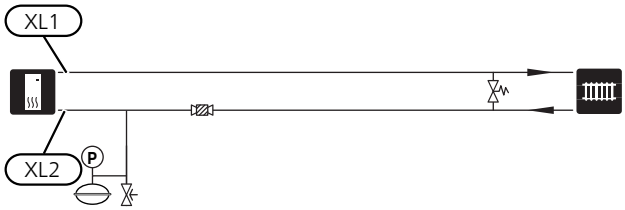


# Cold and hot water

## CONNECTING COLD AND HOT WATER

- Fit shut-off valve, non-return valve and safety valve as illustrated.
- The safety valve must have a maximum 1.0 MPa (10.0 bar) opening pressure and be installed on the incoming domestic water line as shown.
- A mixer valve must also be installed, if the factory setting for hot water is changed. National regulations must be observed.
- The setting for hot water is made in menu 5.1.1 (page 47).

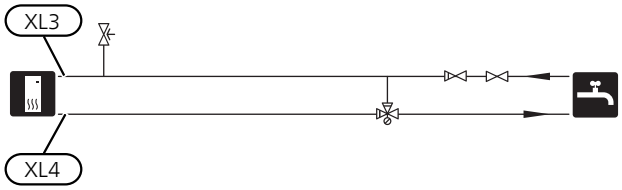


# Docking alternatives

F1245 can be connected in several different ways, some of which are shown below.

Further option information is available at nibe.eu and in the respective assembly instructions for the accessories used. See page 69 for a list of the accessories that can be used with F1245.

## BUFFER VESSEL

If the climate system volume is too small for the heat pump output, the radiator system can be supplemented with a buffer vessel, for example NIBE UKV.

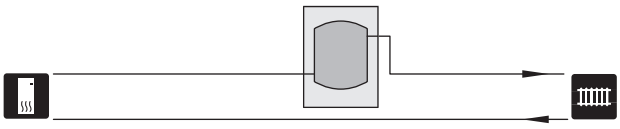

## EXTRA HOT WATER HEATERS

The system should be supplemented with an extra water heater, if a large bath tub or other significant consumer of hot water is installed.

### *Water heater with immersion heater*

If it is possible to use a water heater with an immersion heater, connect it as illustrated below.

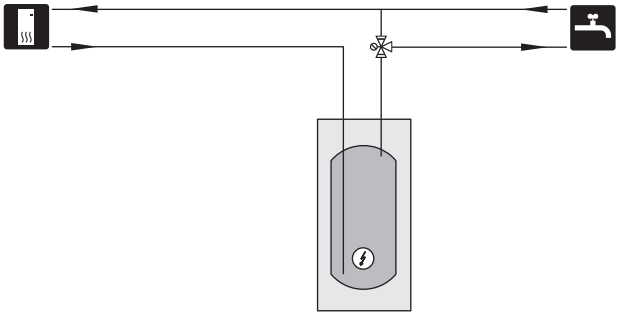

## GROUND WATER SYSTEM

An intermediate heat exchanger is used to protect the heat pump's exchanger from dirt. The water is released into a buried filtration unit or a drilled well. See page 30 for more information about connecting a ground water pump.

If this docking alternative is used, "min. brine out" in menu 5.1.7 "br pmp al set." must be changed to a suitable value to prevent freezing of the heat exchanger.

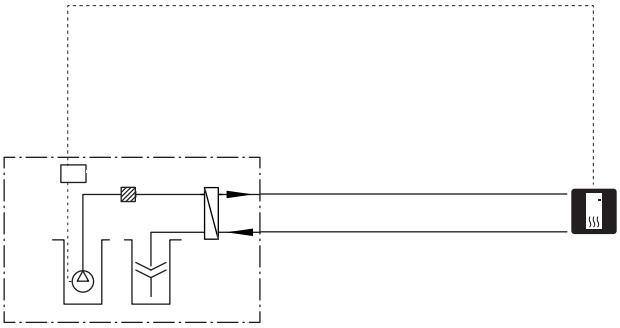

## VENTILATION RECOVERY

The installation can be supplemented with the exhaust air module NIBE FLM to provide ventilation recovery.

- Pipes and other cold surfaces must be insulated with diffusion-proof material to prevent condensation.
- The brine system must be supplied with a pressure expansion vessel. If there is a level vessel this should be replaced.

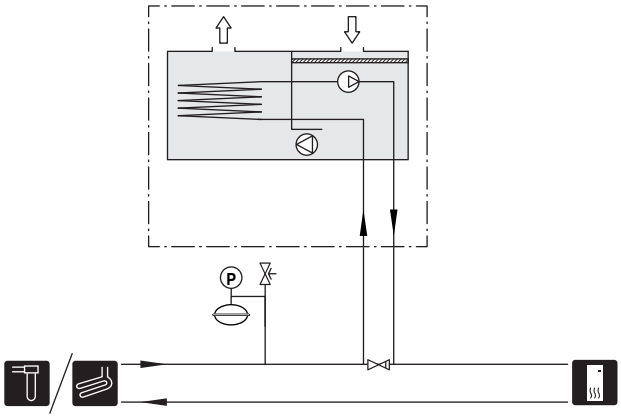

## FREE COOLING

The accessory PCS 44 allows the connection of passive cooling, for example with fan coils. The cooling system is connected to the heat pump brine circuit, whereby cooling is supplied from the collector via a circulation pump and shunt valve.

- Pipes and other cold surfaces must be insulated with diffusion-proof material to prevent condensation.
- Where the cooling demand is high, fan convectors with drip trays and drain connection are needed.
- The brine system must be supplied with a pressure expansion vessel. If there is a level vessel this should be replaced.

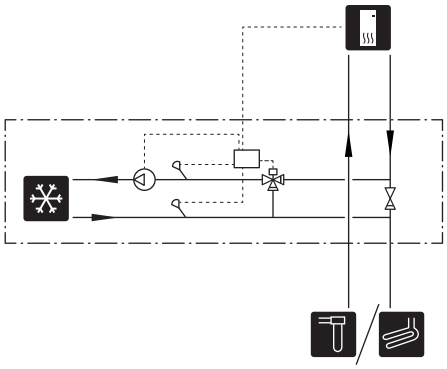

## TWO OR MORE CLIMATE SYSTEMS

In buildings with several climate systems that require different supply temperatures, the accessory ECS 40/ECS 41 can be connected. A shunt valve then lowers the temperature to the underfloor heating system, for example.

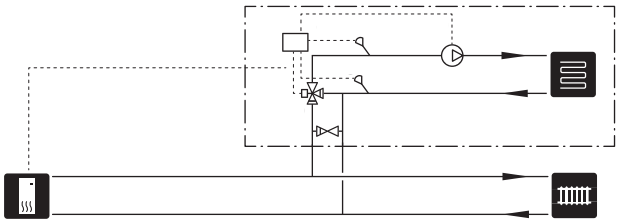

## POOL

With the POOL 40 accessory, you can heat the pool with your heat pump.

During pool heating, the heating medium circulates between the F1245 and the pool exchanger using the heat pump's internal circulation pump.

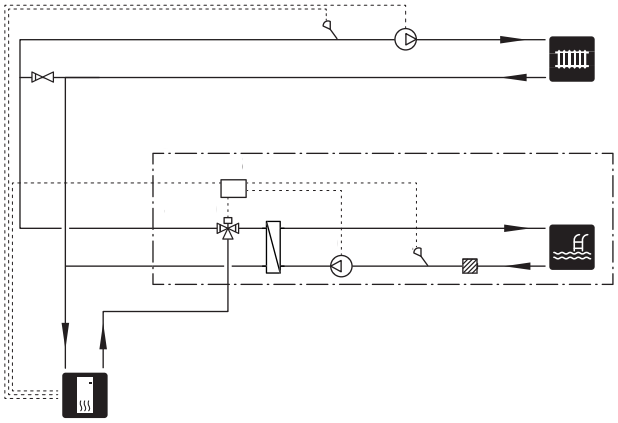

# 5 Electrical connections

## General

All electrical equipment, except the outdoor sensors, room sensors and the current sensors are ready connected at the factory.

- Disconnect the heat pump before insulation testing the house wiring.
- If the building is equipped with an earth-fault breaker, F1245 should be equipped with a separate one.
- If a miniature circuit breaker is used this should have at least motor characteristic "C". See page 72 for fuse size.
- Electrical wiring diagrams for the heat pump, see separate installation handbook for electrical wiring diagrams.
- Communication and sensor cables to external connections must not be laid close to high current cables.
- The minimum area of communication and sensor cables to external connections must be 0.5 mm² up to 50 m, for example EKKX or LiYY or equivalent.
- When cable routing in F1245, cable grommets (e.g. UB1-UB3, marked in image) must be used. In UB1-UB3 the cables are inserted through the heat pump from the back to the front.

*NOTE*

The switch (SF1) must not be moved to "I" or "⚠" until the boiler has been filled with water. Components in the product could be damaged.

*NOTE*

Electrical installation and service must be carried out under the supervision of a qualified electrician. Cut the current with the circuit breaker before carrying out any servicing. Electrical installation and wiring must be carried out in accordance with the stipulations in force.

*NOTE*

Check the connections, main voltage and phase voltage before the machine is started, to prevent damage to the heat pump electronics.

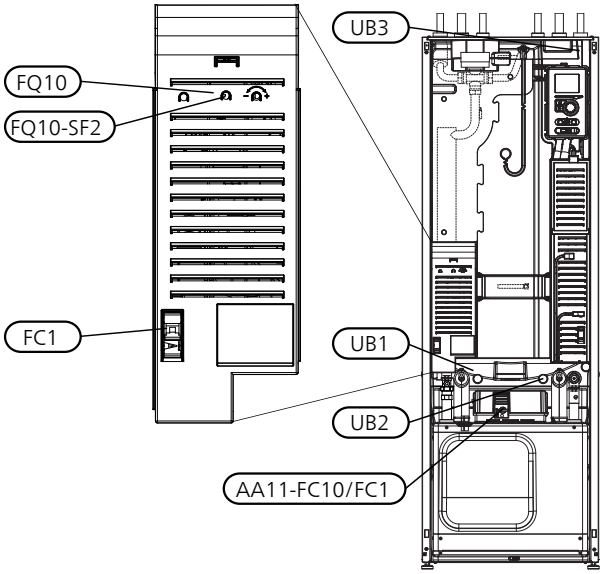


### MINIATURE CIRCUIT-BREAKER

The heat pump operating circuit and some of its internal components are internally fused by a miniature circuit breaker (FC1).

### TEMPERATURE LIMITER

The temperature limiter (FQ10) cuts the power to the electric additional heat if the temperature exceeds 89°C and is reset manually.

#### *Resetting*

The temperature limiter (FQ10) is accessed behind the front cover. Reset the temperature limiter by pressing the button (FQ10-SF2) using a small screwdriver.

## MOTOR PROTECTION BREAKER /MINIATURE CIRCUIT BREAKER

Motor protection breaker (AA11-FC10) / miniature circuit breaker (AA11-FC1) cuts the power to the compressor if the current is too high. It is located behind the front cover and is reset manually.

> *Caution*
>
> Check the miniature circuit-breaker, temperature limiter and motor protection breaker. They may have tripped during transportation.

## ACCESSIBILITY, ELECTRICAL CONNECTION

The plastic cap of the electrical boxes is opened using a screwdriver.

> *NOTE*
>
> The cover for the input card is opened without a tool.

### *Removing the cover, input circuit board*

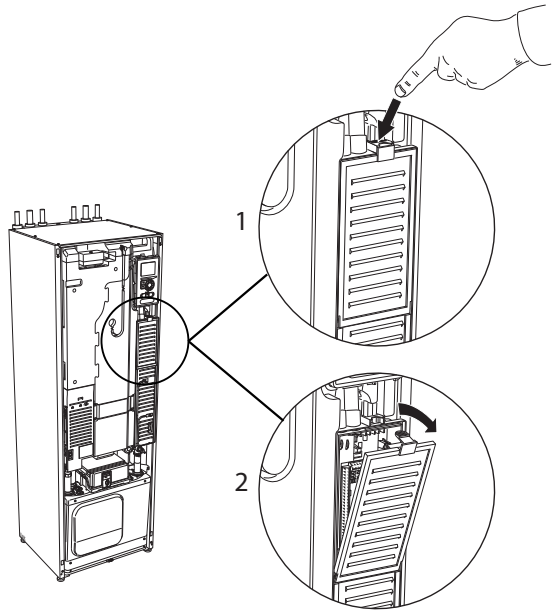


1. Push the catch down.
2. Angle out the cover and remove it.

### *Removing the cover, immersion heater circuit board*

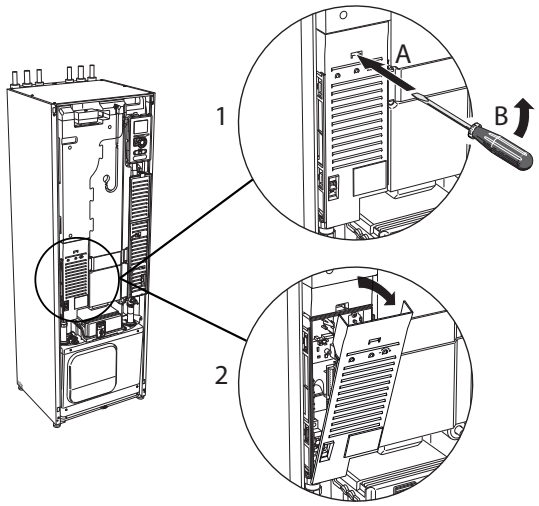


1. Insert the screwdriver (A) and pry the catch carefully downwards (B).
2. Angle out the cover and remove it.

### *Removing the cover, base board*

> *Caution*
>
> To remove the cover for the base board, the cover for the input circuit board must first be removed.

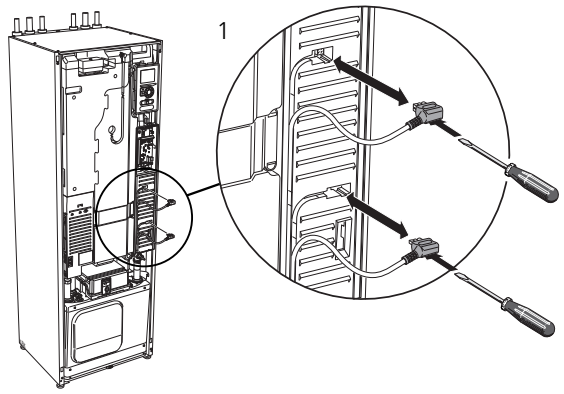


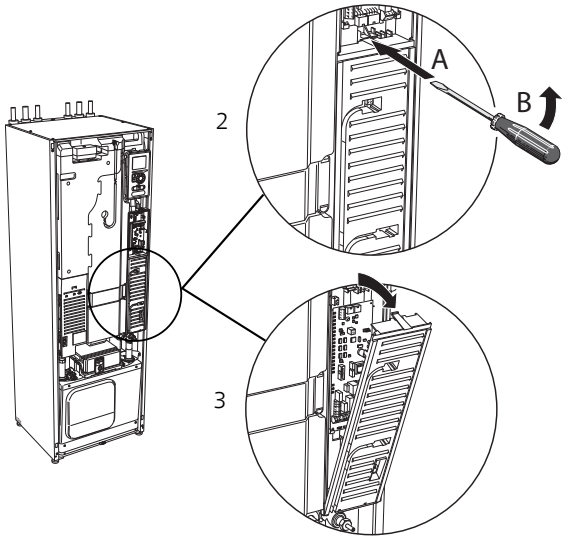

1. Disconnect the switches using a screwdriver.
2. Insert the screwdriver (A) and pry the catch carefully downwards (B).
3. Angle out the cover and remove it.

### CABLE LOCK

Use a suitable tool to release/lock cables in the heat pump terminal blocks.

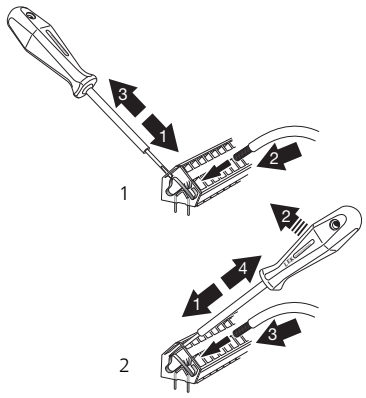


# Connections

> *NOTE*
> To prevent interference, unscreened communication and/or sensor to external connections cables must not be laid closer than 20 cm to high voltage cable when cable routing.

### POWER CONNECTION

F1245 must be installed with a disconnection option on the supply cable. Minimum cable area must be sized according to the fuse rating used. Enclosed cable for incoming supply electricity is connected to terminal block X1 on the immersion heater board (AA1). All installations must be carried out in accordance with current norms and directives.

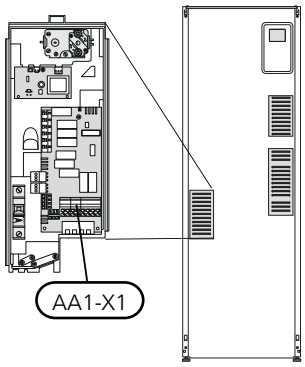


*Connection 3x400V*

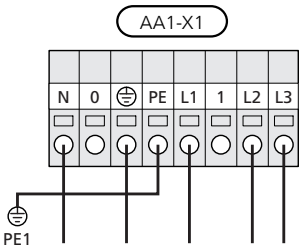


> *NOTE*
> F1245 contains scroll compressor, which means that it is important that electrical connections are made with the correct phase sequence. With the incorrect phase sequence, the compressor does not start and an alarm is displayed.

If a separate supply to the compressor and electric heater is wanted, see section "External blocking of functions" on page 30.

### TARIFF CONTROL

If the voltage to the immersion heater and/or the compressor disappears during a certain period, there must also be blocking via the AUX-input, see "Connection options - Possible selection for AUX inputs" page. 30

## CONNECTING EXTERNAL OPERATING VOLTAGE FOR THE CONTROL SYSTEM

> ⚠ *NOTE*
>
> Mark up any junction boxes with warnings for external voltage.

If you wish to connect external operating voltage for the control system to F1245 on the immersion heater circuit board (AA1) the edge connector at AA1:X2 must be moved toAA1:X9 (as illustrated).

Operating voltage (1x230V ~ 50Hz) is connected to AA1:X11 (as illustrated).

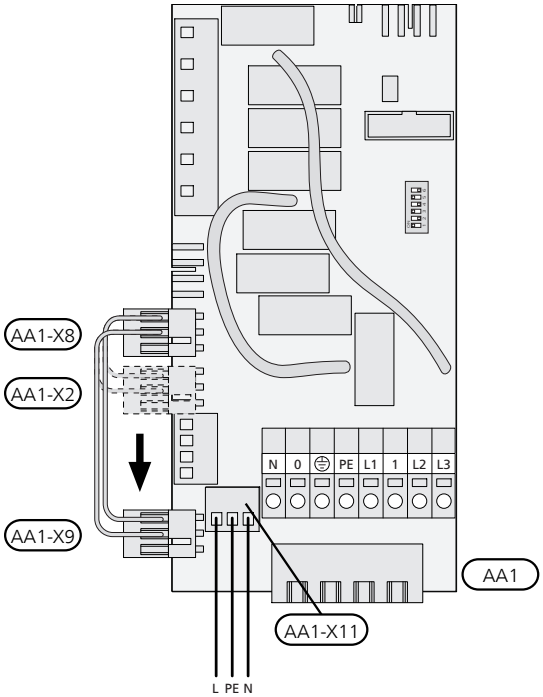


1x230V+N+PE operating voltage

## CONNECTING SENSORS

Connect the sensor(s) to terminal X6 on input board(AA3) according to the instructions below.

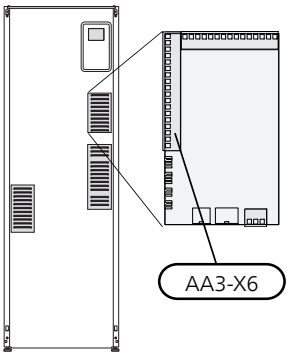


### *Outside sensor*

Install the outdoor temperature sensor (BT1) in the shade on a wall facing north or north-west, so it is unaffected by the morning sun for example.

Connect the sensor to terminal block X6:1 and X6:2 on the input board (AA3). Use a twin core cable of at least 0.5 mm² cable area.

If a conduit is used it must be sealed to prevent condensation in the sensor capsule.

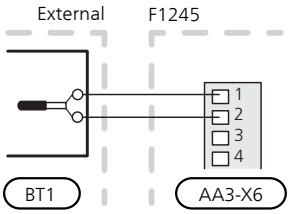


### *Temperature sensor, external flow line*

If temperature sensor, external flow line (BT25) needs to be used, connect it to terminal block X6:5 and X6:6 on the input card (AA3). Use a 2 core cable of at least 0.5 mm² cable area.

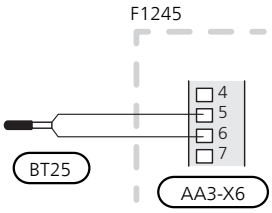


### *Temperature sensor, external return line*

If temperature sensor, external return line (BT71) needs to be used, connect it to one of the AUX inputs on the input board (AA3). Use a 2 core cable of at least 0.5 mm² cable area.

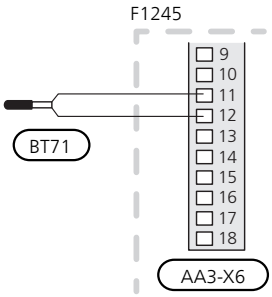


### *Room sensor*

F1245 is supplied with a room sensor enclosed (BT50). The room sensor has a number of functions:

1. Shows current room temperature in the display on F1245.
2. Option of changing the room temperature in °C.
3. Provides the option of fine-tuning the room temperature.

Install the sensor in a neutral position where the set temperature is required. A suitable location is on a free inner wall in a hall approx. 1.5 m above the floor. It is important that the sensor is not obstructed from measuring the correct room temperature by being located, for example, in a recess, between shelves, behind a curtain, above or close to a heat source, in a draft from an external door or in direct sunlight. Closed radiator thermostats can also cause problems.

The heat pump operates without the sensor, but if one wishes to read off the accommodation's indoor temperature in F1245's display, the sensor must be installed. Connect the room sensor to X6:3 and X6:4 on the input board (AA3).

If the sensor is to be used to change the room temperature in °C and/or to fine-tune the room temperature, the sensor must be activated in menu 1.9.4.

If the room sensor is used in a room with underfloor heating, it should only have an indicatory function, not control of the room temperature.

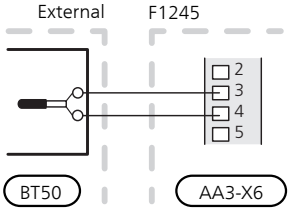


*Caution*

Changes of temperature in accommodation take time. For example, short time periods in combination with underfloor heating will not give a noticeable difference in room temperature.

# Settings

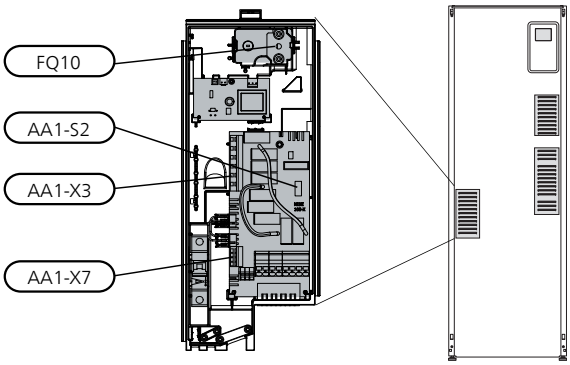


## ELECTRICAL ADDITION - MAXIMUM OUTPUT

Number of steps, maximum electrical output and supply on connection for the immersion heater varies depending on model. See tables.

The electric additional heat may be restricted depending on the selected country.

On delivery, the immersion heater is connected for a maximum of 7 kW (switchable to 9 kW).

The immersion heater's output is split into seven steps (four steps if the immersion heater is switched to maximum 9 kW), according to the table below.

### *Setting max electrical output*

Setting maximum output in the electric additional heat is done in menu 5.1.12.

The table displays the total phase current for the immersion heater at start up. If an immersion heater has already been started and is not used for its full capacity the values in the table can be changed because the control initially uses this immersion heater.

### *Switching to maximum electrical output*

If more than the maximum output (7 kW) for the immersion heater connected on delivery is needed, the heat pump can be switched to maximum 9 kW.

Move the white cable from terminal block X7:23 to terminal block X3:13 (the seal on the terminal block must be broken) on the immersion heater card (AA1).

*3x400V V (maximum electrical output, connected upon delivery 7 kW)*

| *Max electrical addition (kW)* | *Max phase current L1(A)* | *Max phase current L2(A)* | *Max phase current L3(A)* |
|---|---|---|---|
| 0 | – | – | – |
| 1 | – | – | 4.3 |
| 2 | – | 8.7 | – |
| 3 | – | 8.7 | 4.3 |
| 4 | – | 8.7 | 8.7 |
| 5 | – | 8.7 | 13.0 |
| 6 | 8.7 | 8.7 | 8.7 |
| 7 | 8.7 | 8.7 | 13.0 |

*3x400V (maximum electrical output, switched to 9 kW)*

| *Max electrical addition (kW)* | *Max phase current L1(A)* | *Max phase current L2(A)* | *Max phase current L3(A)* |
|---|---|---|---|
| 0 | – | – | – |
| 2 | – | 8.7 | – |
| 4 | – | 8.7 | 8.7 |
| 6 | 8.7 | 8.7 | 8.7 |
| 9 | 8.7 | 15.6 | 15.6 |

If the current sensors are connected, the heat pump monitors the phase currents and allocates the electrical steps automatically to the least loaded phase.

## EMERGENCY MODE

When the heat pump is set to emergency mode (SF1 is set to ⚠) only the most necessary functions are activated.

- The compressor is off and heating is managed by the immersion heater.
- Hot water is not produced.
- The load monitor is not connected.

> *NOTE*
> The switch (SF1) must not be moved to "I" or "⚠" until F1245 has been filled with water. Components in the product can be damaged.

### *Power in emergency mode*

The immersion heater's output in emergency mode is set with the dipswitch (S2) on the immersion heater circuit board (AA1) according to the table below. Factory setting is 6 kW.

*3x400V (maximum electrical output, connected upon delivery 7 kW)*

| *kW* | *1* | *2* | *3* | *4* | *5* | *6* |
|---|---|---|---|---|---|---|
| 1 | off | off | off | off | off | **on** |
| 2 | off | off | **on** | off | off | off |
| 3 | off | off | **on** | off | off | **on** |
| 4 | off | off | **on** | off | **on** | off |
| 5 | **on** | off | **on** | off | off | **on** |
| 6 | **on** | off | **on** | off | **on** | off |
| 7 | **on** | off | **on** | off | **on** | **on** |

*3x400V (maximum electrical output, switched to 9 kW)*

| *kW* | *1* | *2* | *3* | *4* | *5* | *6* |
|---|---|---|---|---|---|---|
| 2 | off | off | off | off | **on** | off |
| 4 | off | off | **on** | off | **on** | off |
| 6 | **on** | off | **on** | off | **on** | off |
| 9 | **on** | off | **on** | **on** | **on** | **on** |

3x400V

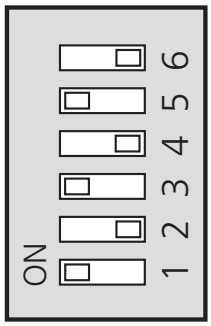


AA1-S2

The image shows the dip-switch (AA1-S2) in the factory setting, that is 6 kW.

### *Emergency mode thermostat*

The supply temperature in emergency mode is set using a thermostat (FQ10). It can be set to 35 (pre-set, for example underfloor heating) or 45 °C (for example radiators).

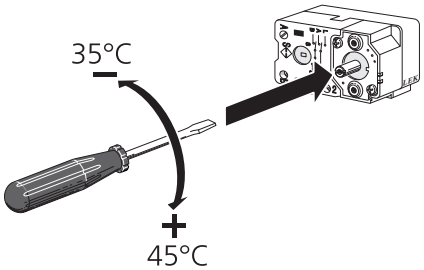


# Optional connections

## MASTER/SLAVE

Several heat pumps (F1145, F1245 and F1345) can be connected by selecting one heat pump as master and the others as slaves.

The heat pump is always delivered as master and up to till 8 slaves can be connected to it. In systems with several heat pumps each pump must have a unique name, that is only one heat pump can be ""Master" and only one can be for example "Slave 5". Set master/slaves in menu 5.2.1.

External temperature sensors and control signals must only be connected to the master, except for external control of the compressor module.

> *NOTE*
> When several heat pumps are connected together (master/slave), external return sensor BT71 must be used. If BT71 is not connected, the product gives a sensor fault.

Connect the communications cables as illustrated in series to the terminal block X4:15 (A), X4:14 (B) and X4:13 (GND) on the input card (AA3).

Use cable type LiYY, EKKX or similar.

The example shows the connection of several F1245 .

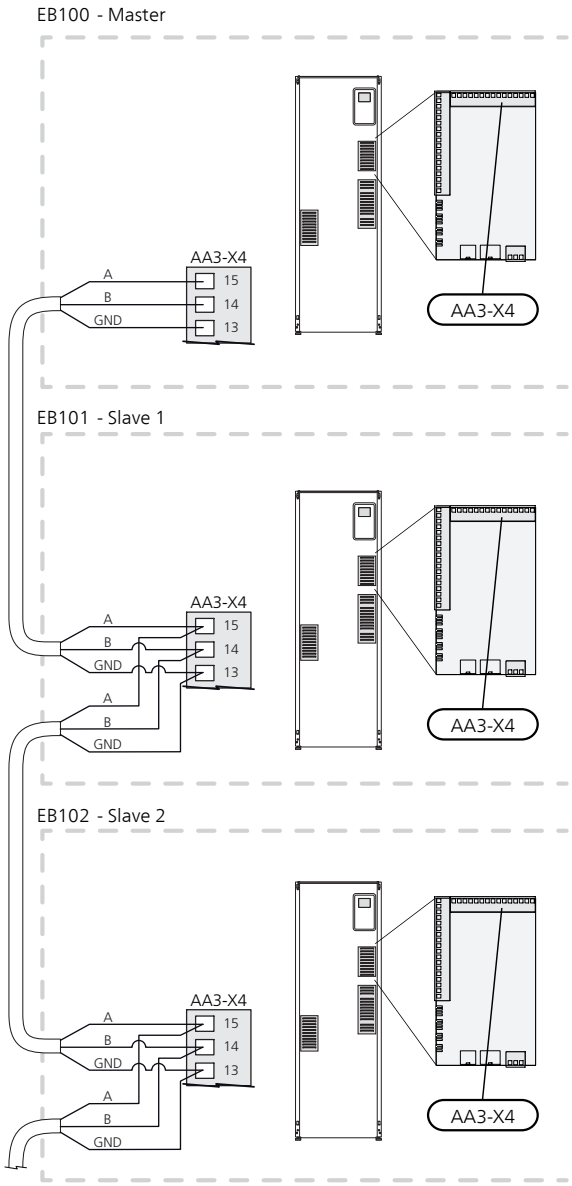


# LOAD MONITOR

## *Integrated load monitor*

F1245 is equipped with a simple form of integrated load monitor, which limits the power steps for the electric additional heat by calculating whether future power steps can be connected to the relevant phase without exceeding the specified main fuse. If the current would exceed the specified main fuse, the power step is not permitted. The size of the property's main fuse is specified in menu 5.1.12.

## *Load monitor with current sensor*

When many power-consuming products are connected in the property at the same time as the electric additional heat is operating, there is a risk that the property's main fuse will trip. F1245 is equipped with a load monitor that, with the help of a current sensor, controls the power steps for the electric additional heat by redistributing the power between the different phases or disengages the electric additional heat if there is an overload in a phase. Reconnection occurs when the other current consumption drops.

*Caution*

Activate phase detection in menu 5.1.12 for full functionality, if current sensors are installed.

## *Connecting current sensors*

A current sensor should be installed on each incoming phase conductor in to the distribution box to measure the current. The distribution box is an appropriate installation point.

Connect the current sensors to a multi-core cable in an enclosure directly adjacent to the electrical distribution unit. The multi-core cable between the enclosure and F1245 must have a cable area of at least 0.5 mm².

Connect the cable to the input board (AA3) on terminal block X4:1-4 where X4:1 is the common terminal block for the three current sensors.

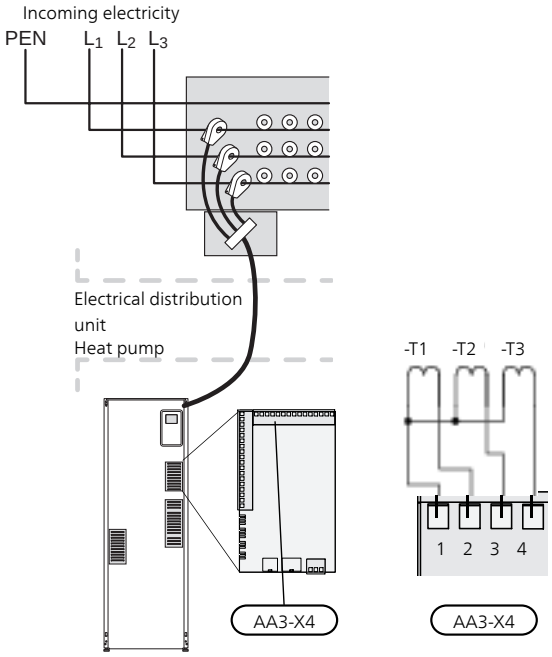


## CONNECTING EXTERNAL ENERGY METER

> ⚠ *NOTE*
>
> Connection of external energy meter requires version 35 or later on input board (AA3) as well as "display version" 7113 or later.

One or two energy meters (BE6, BE7) are connected to terminal block X22 and/or X23 on input board (AA3).

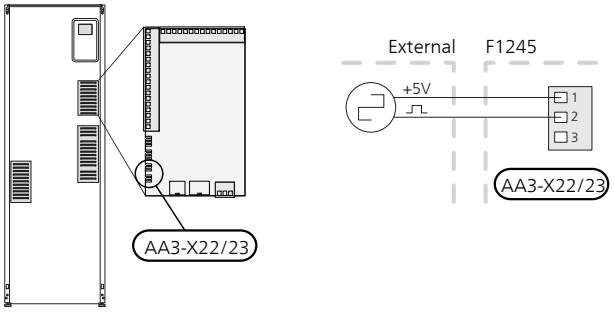


Activate the energy meter(s) in menu 5.2.4 and then set the desired value (energy per pulse) in menu 5.3.21.

## NIBE UPLINK

Connect the network connected cable (straight, Cat.5e UTP) with RJ45-contact (male) to RJ45 contact (female) on the rear of the heat pump.

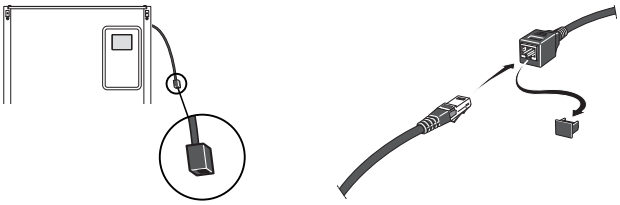

## EXTERNAL CONNECTION OPTIONS

F1245 has software-controlled AUX inputs and outputs on the input board (AA3), for connecting the external switch function or sensor. This means that when an external switch function (the switch must be potential-free) or sensor is connected to one of six special connections, this function must be selected for the correct connection in menu 5.4.

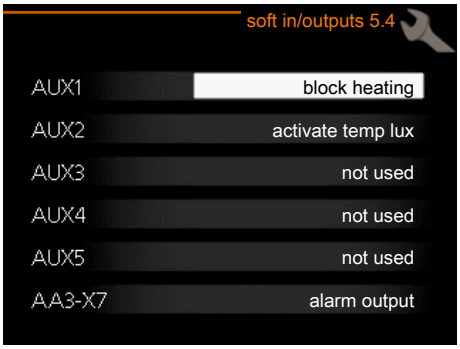


For certain functions, accessories may be required.

### *Selectable inputs*

Selectable inputs on the input board for these functions are:

| | |
|---|---|
| AUX1 | AA3-X6:9-10 |
| AUX2 | AA3-X6:11-12 |
| AUX3 | AA3-X6:13-14 |
| AUX4 | AA3-X6:15-16 |
| AUX5 | AA3-X6:17-18 |

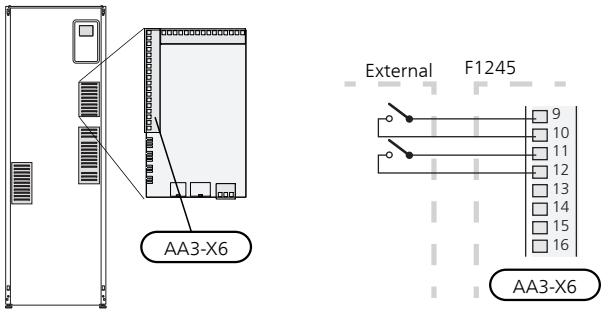


The example above uses the inputs AUX1 (X6:9-10) and AUX2 (X6:11-12) on the input board (AA3).

### *Selectable output*

A selectable output is AA3-X7.

*TIP*

Some of the following functions can also be activated and scheduled via menu settings.

## POSSIBLE SELECTION FOR AUX INPUTS

### *Temperature sensor*

Temperature sensor can be connected to F1245. Use a 2-core cable of at least 0.5 mm² cable area.

Available options are:

- external supply line (BT25) (control of temperature to the heating system)
- cooling/heating (BT74), determines when it is time to switch between cooling and heating mode (only shown if cooling accessory is selected in menu 5.2.4).
- return temperature (BT71)

### *Monitor*

Available options are:

- alarm from external units. The alarm is connected to the control, which means that the malfunction is presented as an information message in the display. Potential-free signal of type NO or NC.
- level (accessory NV10)/, pressure/flow monitor for the brine (NC).
- pressure switch for climate system (NC).

### *External activation of functions*

An external switch function can be connected to F1245 to activate various functions. The function is activated during the time the switch is closed.

Possible functions that can be activated:

- forced control of brine pump
- hot water comfort mode "temporary lux"
- hot water comfort mode "economy"
- "external adjustment"

  When the switch is closed, the temperature changes in °C (if the room sensor is connected and activated). If a room sensor is not connected or not activated, the desired change of "temperature" (heating curve offset) is set with the number of steps selected. The value is adjustable between -10 and +10. External adjustment of climate systems 2 to 8 requires accessories.

  – *climate system 1 to 8*

    The value for the change is set in menu 1.9.2, "external adjustment".

- activation of one of four fan speeds.

  (Can be selected if ventilation accessory is activated.)

  The following five options are available:

  – 1-4 is normally open (NO)

  – 1 is normally closed (NC)

  The fan speed is activated during the time the switch is closed. Normal speed is resumed when the switch is opened again.

- +Adjust

  Using +Adjust, the installation communicates with the underfloor heating's control centre* and adjusts the heating curve and calculated supply temperature according to the underfloor heating system's reconnection.

  Activate the climate system you want +Adjust to affect by highlighting the function and pressing the OK button.

  *Support for +Adjust required

  *Caution*

  This accessory may require a software update in your F1245. The version can be checked in the "Service info" menu 3.1. Visit nibeuplink.com and click on the "Software" tab to download the latest software to your installation.

  *Caution*

  In systems with both underfloor heating and radiators, NIBE ECS 40/41 should be used for optimum operation.

- SG ready

  *Caution*

  This function can only be used in mains networks that support the "SG Ready" standard.

  "SG Ready" requires two AUX inputs.

  "SG Ready" is a smart form of tariff control, through which your electricity supplier can affect the indoor, hot water and/or pool temperatures (if applicable) or simply block the additional heat and/or compressor in the heat pump at certain times of the day (can be selected in menu 4.1.5 after the function is activated). Activate the function by connecting potential-free switch functions to two inputs selected in menu 5.4 (SG Ready A and SG Ready B).

  Closed or open switch means one of the following:

  – *Blocking (A: Closed, B: Open)*

    "SG Ready" is active. The compressor in the heat pump and additional heat is blocked like the day's tariff blocking.

  – *Normal mode (A: Open, B: Open)*

    "SG Ready" is not active. No effect on the system.

– *Low price mode (A: Open, B: Closed)*

"SG Ready" is active. The system focuses on costs savings and can for example exploit a low tariff from the electricity supplier or over-capacity from any own power source (effect on the system can be adjusted in the menu 4.1.5).

– *Overcapacity mode (A: Closed, B: Closed)*

"SG Ready" is active. The system is permitted to run at full capacity at over capacity (very low price) with the electricity supplier (effect on the system is settable in menu 4.1.5).

(A = SG Ready A and B = SG Ready B )

### *External blocking of functions*

An external switch function can be connected to F1245 for blocking various functions. The switch must be potential-free and a closed switch results in blocking.

> *NOTE*
>
> Blocking entails a risk of freezing.

Functions that can be blocked:

- heating (blocking of heating demand)
- hot water (hot water production). Any hot water circulation (HWC) remains in operation.
- compressor
- internally controlled additional heat
- tariff blocking (additional heat, compressor, heating, cooling and hot water are disconnected)

## POSSIBLE SELECTION FOR AUX OUTPUT (POTENTIAL FREE VARIABLE RELAY)

It is possible to have an external connection through the relay function via a potential free variable relay (max 2 A) on the input circuit board (AA3), terminal block X7.

Optional functions for external connection:

- Indication of buzzer alarm.
- Controlling ground water pump.
- Cooling mode indication (only applies if cooling accessories are available).
- Control of circulation pump for hot water circulation.
- External circulation pump (for heating medium).
- External, reversing valve for hot water.
- Holiday indication.

If any of the above is installed to terminal block X7 it must be selected in menu 5.4, see page 57.

The common alarm is preselected at the factory.

> *NOTE*
>
> An accessory card is required if several functions are connected to terminal block X7 at the same time that the buzzer alarm is activated (see page 69).

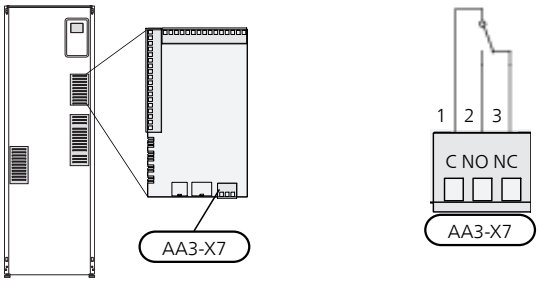


The picture shows the relay in the alarm position.

When switch (SF1) is in the "⏻" or "⚠" position the relay is in the alarm position.

External circulation pump, ground water pump or hot water circulation pump connected to the buzzer alarm relay as illustrated below.

> *NOTE*
>
> Mark up any junction boxes with warnings for external voltage.

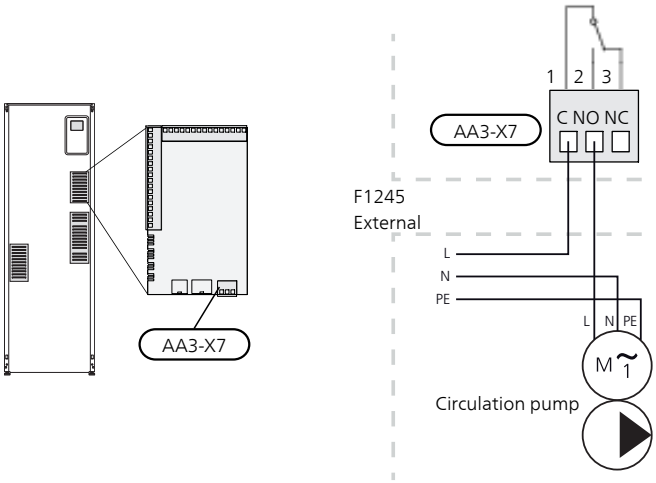


> *Caution*
>
> The relay outputs can have a max load of 2 A (230V ~).

# Connecting accessories

Instructions for connecting accessories are in the installation instructions provided for the respective accessory. See information at nibe.eu for the list of the accessories that can be used with F1245.

## ACCESSORIES WITH CIRCUIT BOARD AA5

Accessories that contain circuit board AA5 are connected to the heat pump terminal block AA3-X4: 13-15. Use cable type LiYY, EKKX or similar.

If several accessories are to be connected, connect the first accessory card directly to the heat pump terminal block. Other accessory boards are connected to the first in series.

Because there can be different connections for accessories with circuit boards AA5, you should always read the instructions in the manual for the accessory that you are going to install.

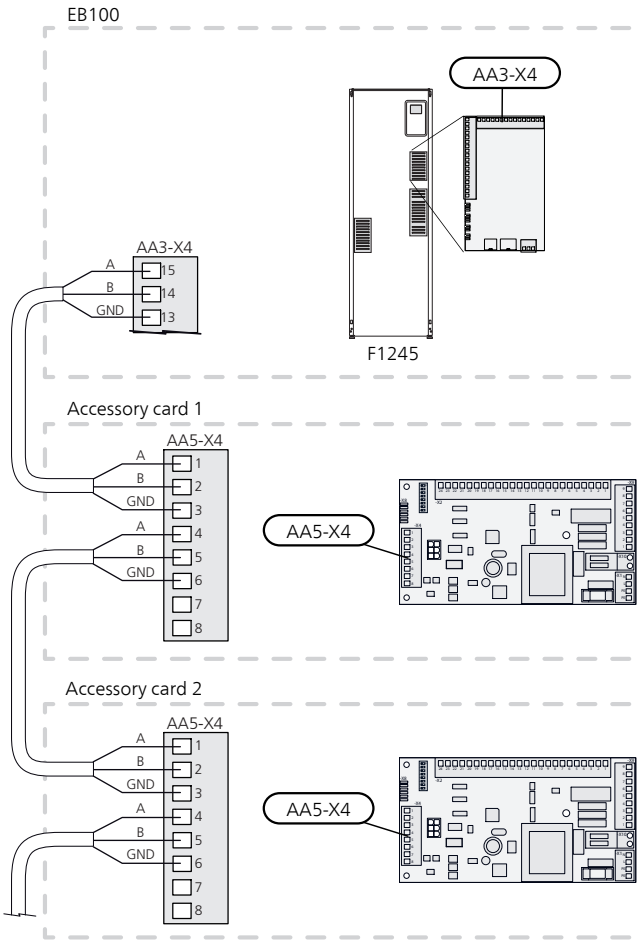


## ACCESSORIES WITH CIRCUIT BOARD AA9

Accessories that contain the circuit board AA9 are connected to the heat pump's terminal block X4:9-12 on the input board AA3. Use cable type LiYY, EKKX or equivalent.

Because there can be different connections for accessories with circuit boards AA9, you should always read the instructions in the manual for the accessory that you are going to install.

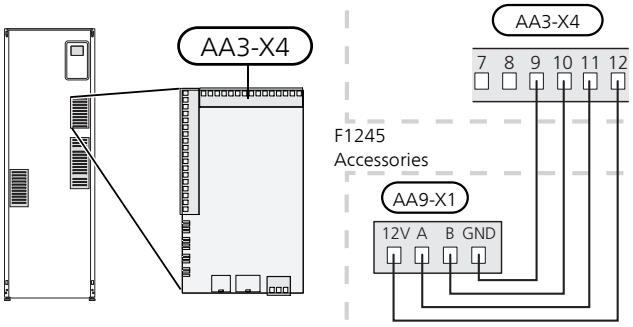

# 6 Commissioning and adjusting

## Preparations

1. Check that the switch (SF1) is in position " ⏻".
2. Check for water in the hot water heater and climate system.

> *Caution*
> Check the miniature circuit-breaker and the motor protection breakers. They may have tripped during transportation.

> *NOTE*
> Do not start F1245 if there is a risk that the water in the system has frozen.

## Filling and venting

> *Caution*
> Insufficient venting can damage internal components in F1245.

### FILLING AND VENTING THE CLIMATE SYSTEM

#### *Filling*

1. Open the filling valve (external, not included in the product). Fill the coil in the hot water heater and the rest of the climate system with water.
2. Open the vent valve (QM22).
3. When the water that exits the vent valve (QM22) is not mixed with air, close the valve. After a while the pressure starts to rise.
4. Close the filling valve when the correct pressure is obtained.

#### *Venting*

1. Bleed the heat pump via a vent valve (QM22) and the rest of the climate system via their relevant vent valves.
2. Keep topping up and venting until all air has been removed and the pressure is correct.

> *NOTE*
> The pipe from the coil in the container must be drained of water before air can be released. This means that the system is not necessarily bled despite the flow of water when the vent valve (QM22) is opened.

### FILLING THE HOT WATER HEATER

1. Open a hot water tap in the house.
2. Fill the hot water heater through the cold water connection (XL3).
3. When the water that comes out of the hot water tap is no longer mixed with air, the water heater is full and the tap can be closed.

### FILLING AND VENTING THE BRINE SYSTEM

When filling the brine system, mix the water with anti-freeze in an open container. The mixture should be protected against freezing down to about -15°C. The brine is topped up by connecting a filling pump.

1. Check the brine system for leakage.
2. Connect the filling pump and return line on the brine system's filling connection (accessory).
3. If alternative 1 is used (level vessel), close the valve under the level vessel.
4. Close the reversing valve in the filling connection.
5. Open the valves on the filler connector.
6. Start the filling pump.
7. Fill until liquid enters the return pipe.
8. Close the valves on the filler connector.
9. Open the reversing valve in the filling connection.
10. If alternative 1 (level vessel) is used, open the valve under the level vessel (CM2).

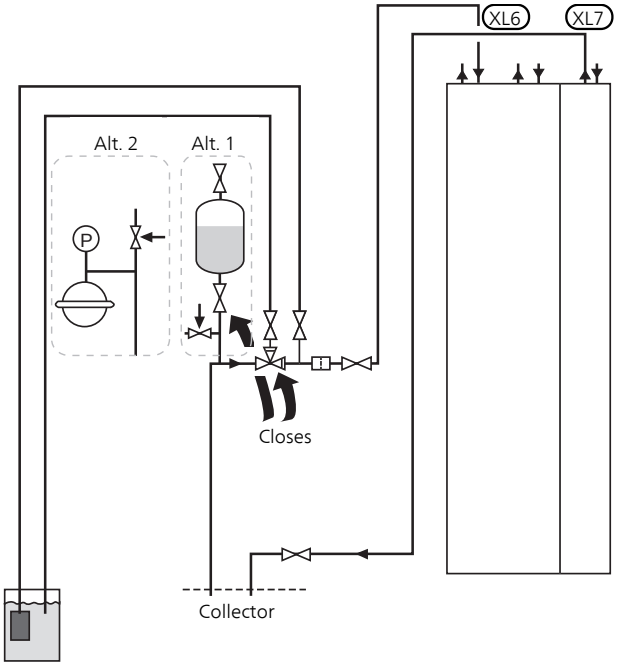


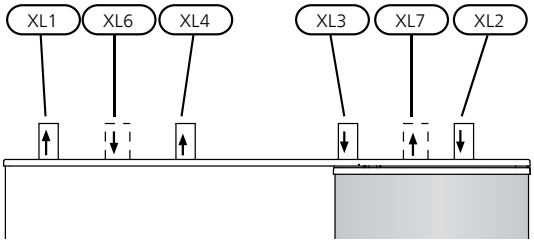


# Start-up and inspection

## START GUIDE

> **NOTE**
>
> There must be water in the climate system before the switch is set to "I".

> **NOTE**
>
> With several heat pumps connected, the start guide must first be run in the subordinate heat pumps.
>
> In the heat pumps that are not the main unit, you can only make settings for each heat pump's circulation pumps. Other settings are made and controlled by the main unit.

1. Set switch (SF1) on F1245 to position "I".
2. Follow the instructions in the display's start guide. If the start guide does not start when you start the F1245, start it manually in menu 5.7.

> **TIP**
>
> See page 38 for a more in-depth introduction to the heat pump's control system (operation, menus etc.).

### Commissioning

The first time the installation is started a start guide is started. The start guide instructions state what needs to carried out at the first start together with a run through of the installation's basic settings.

The start guide ensures that the start-up is carried out correctly and, for this reason, cannot be skipped.

> **Caution**
>
> As long as the start guide is active, no function in the installation will start automatically.
>
> The start guide will appear at each restart of the installation, until it is deselected on the last page.

### Operation in the start guide

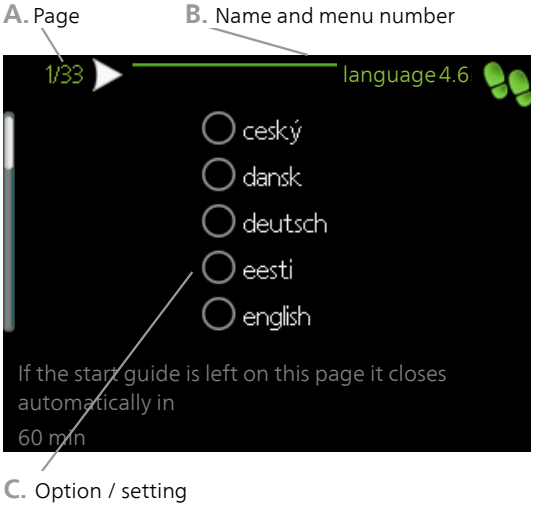


#### A. Page

Here you can see how far you have come in the start guide.

Scroll between the pages of the start guide as follows:

1. Turn the control knob until one of the arrows in the top left corner (at the page number) has been marked.
2. Press the OK button to skip between the pages in the start guide.

#### B. Name and menu number

Here, you can see which menu in the control system this page of the start guide is based on. The digits in brackets refer to the menu number in the control system.

If you want to read more about affected menus either consult the help menu or read the user manual.

*C. Option / setting*

Make settings for the system here.

## POST ADJUSTMENT AND VENTING

### *Pump adjustment, automatic operation*

#### *Brine side*

To set the correct flow in the brine system, the brine pump must run at the correct speed. F1245 has a brine pump that is controlled automatically in standard mode. Certain functions and accessories may demand that it be run manually, in which case the correct speed must be set.

> *TIP*
>
> For optimum operation when several heat pumps are installed in a multi-installation, all heat pumps should have the same compressor size.

This automatic control occurs when the compressor is running and sets the speed of the brine pump so that the optimum temperature difference between the supply and return lines is attained.

#### *Heating medium side*

To set the correct flow in the heating medium system, the heating medium pump must run at the correct speed. F1245 has a heating medium pump that can be automatically controlled in standard mode. Certain functions and accessories may require it to run manually and the correct speed must then be set.

This automatic control occurs when the compressor is running and sets the speed of the heating medium pump, for the present operating mode, so the optimum temperature difference between the supply and return lines is achieved. During heating operation, the set DOT (dimensioned outdoor temperature) and temperature differential in menu 5.1.14 are used. If necessary, the maximum speed of the circulation pump can be limited in menu 5.1.11.

### *Pump adjustment, manual operation*

#### *Brine side*

F1245 has a brine pump that can be automatically controlled. For manual operation: deactivate "auto" in menu 5.1.9 and then set the speed according to the diagram below.

> *Caution*
>
> When an accessory for passive cooling is used, the brine pump speed must be set in menu 5.1.9.

Set the pump speed when the system has come into balance (ideally 5 minutes after compressor start).

Adjust the flow so the temperature difference between brine out (BT11) and brine in (BT10) is between 2 - 5 °C. Check these temperatures in menu 3.1 "service info" and adjust the brine pump's (GP2) speed until the temperature difference is obtained. A large difference indicates a low brine flow and a small difference indicates a high brine flow.

Read off what speed the brine pump should have during manual operation from the diagram below.

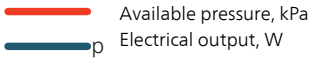


*F1245 6 and 8 kW*

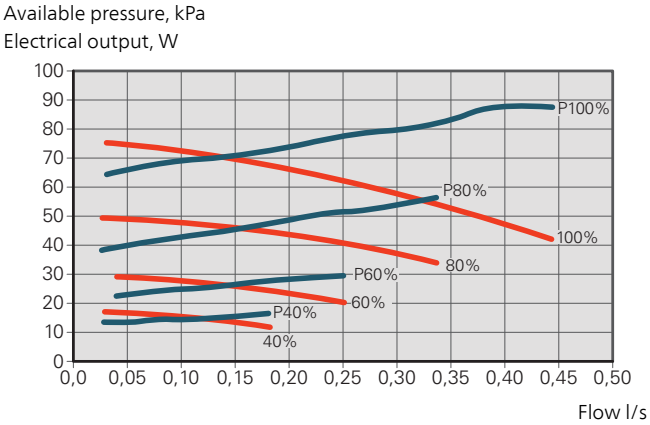


*F1245 10 kW*

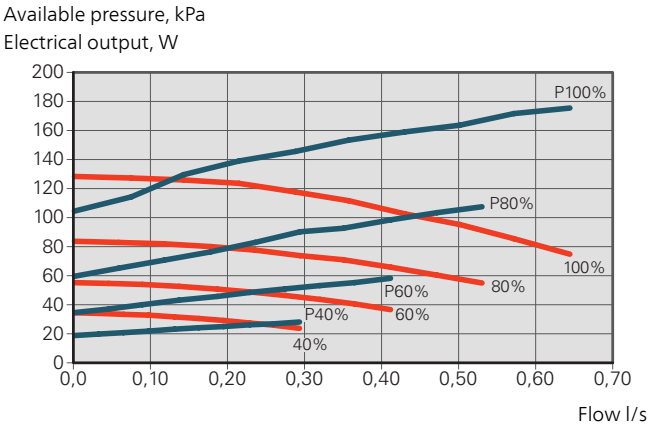

*F1245 12 kW*

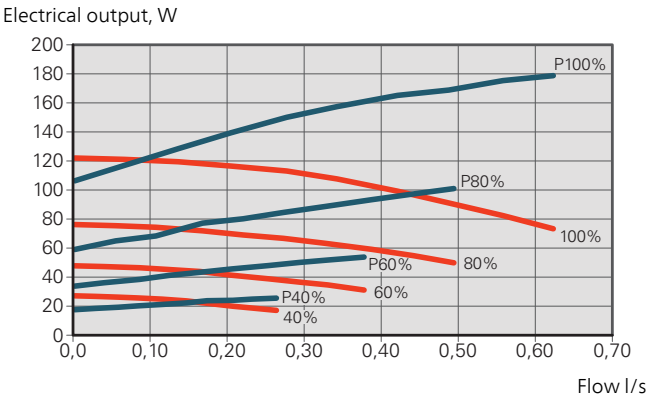


## *Heating medium side*

F1245 has a heating medium pump that can be automatically controlled. For manual operation: deactivate "auto" in menu 5.1.11 and then set the speed according to the diagrams below.

The flow must have a suitable temperature difference for the operating case (heating operation: 5 - 10 °C, hot water generation: 5 - 10 °C, pool heating: approx. 15 °C) between controlling supply temperature sensor and return line sensor. Check these temperatures in menu 3.1 "service info" and adjust the heating medium pump (GP1) speed until the temperature difference is attained. A high difference indicates a low heating medium supply and a low difference indicates a high heating medium supply.

Read off what speed the heating medium pump should have during manual operation from the diagrams below.

Available pressure, kPa
p Electrical output, W

*F1245 6 kW*

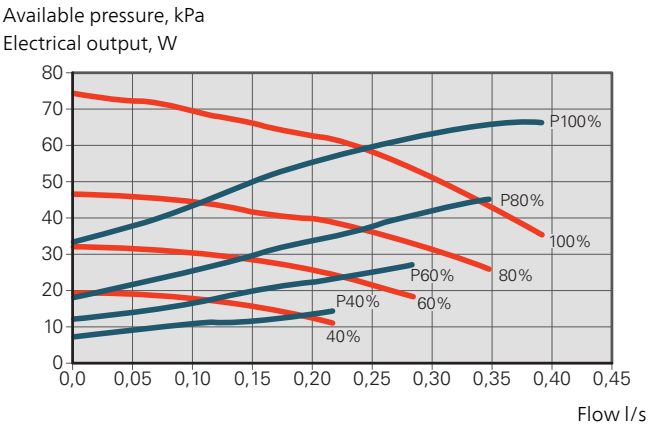


*F1245 8 and 12 kW*

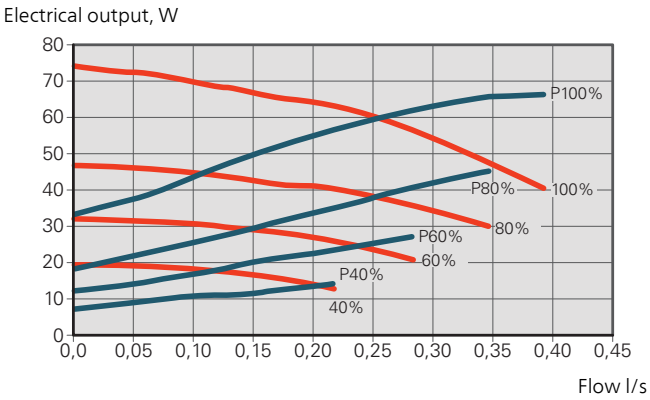


*F1245 10 kW*

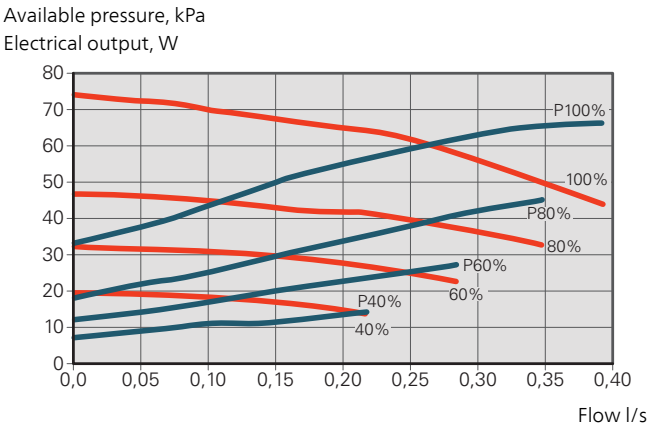


## *Readjusting, venting, heat medium side*

Air is initially released from the hot water and venting may be necessary. If gurgling sounds can be heard from the heat pump or climate system, the entire system requires additional venting. Check the pressure in the pressure expansion vessel (CM1) with the pressure gauge (BP5). If the pressure drops, the system should be replenished.

### *Readjusting, venting, collector side*

#### *Level vessel*

Check the fluid level in the level vessel (CM2). If the fluid level has dropped, top up the system.

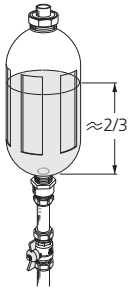


1. Close the valve under the vessel.
2. Disconnect the connection on top of the vessel.
3. Fill with brine until approx 2/3 of the vessel is full.
4. Reconnect the connector at the top of the vessel.
5. Open the valve under the vessel.

If the pressure in the system needs to be raised, this is done by closing the valve on the outgoing main line when the brine pump (GP2) is in operation and the level vessel (CM2) is open, so that liquid is drawn down from the vessel.

#### *Expansion vessel*

If a pressure expansion vessel (CM3) is used instead of a level vessel, the pressure level is checked with the pressure gauge (BP6). If the pressure drops, the system should be replenished.

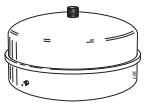

# Setting the heating curve

In menu Curve, heating you can view the heating curve for your house. The task of the curve is to give an even indoor temperature, regardless of the outdoor temperature, and thereby energy efficient operation. It is from this curve that the F1245 determines the temperature of the water to the climate system (the supply temperature) and thus the indoor temperature.

## CURVE COEFFICIENT

The slope of the heating curve indicates how many degrees the supply temperature is to be increased/reduced when the outdoor temperature drops/increases. A steeper slope means a higher supply temperature at a certain outdoor temperature.

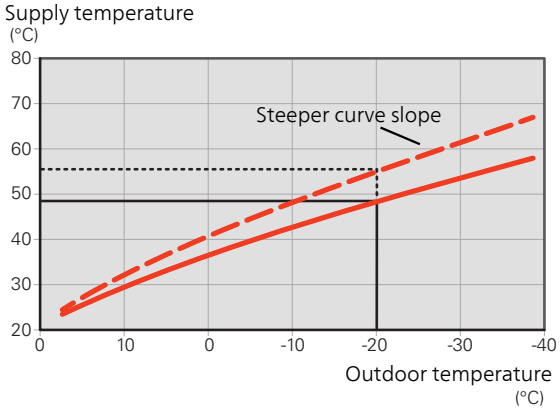


The optimum curve slope depends on the climate conditions in your location, whether the house has radiators, fan coils or underfloor heating and how well insulated the house is.

The heating curve is set when the heating installation is installed, but may need adjusting later. Normally, the curve will not need further adjustment.

## CURVE OFFSET

An offset of the heating curve means that the supply temperature is changed by the same amount for all outdoor temperatures, e.g. a curve offset of +2 steps increases the supply temperature by 5 °C at all outdoor temperatures.

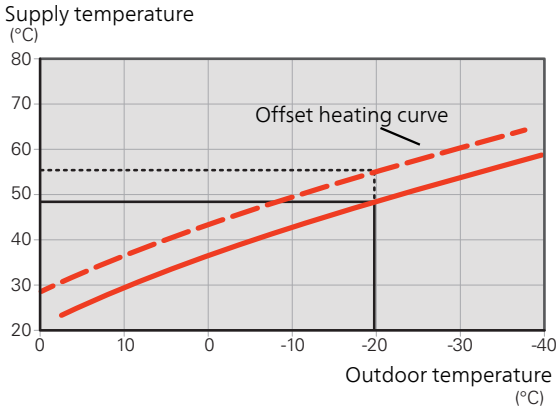


## SUPPLY TEMPERATURE – MAXIMUM AND MINIMUM VALUES

Because the flow line temperature cannot be calculated higher than the set maximum value or lower than the set minimum value the heating curve flattens out at these temperatures.

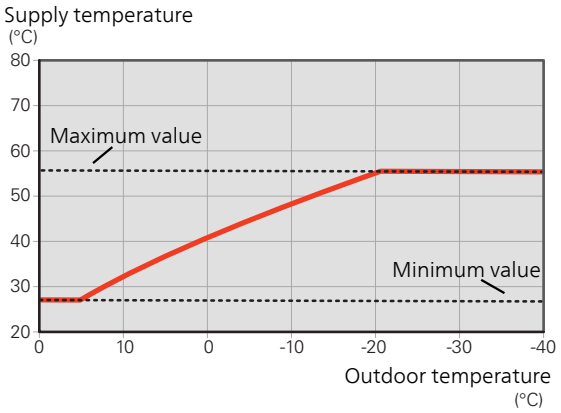


> *Caution*
>
> With underfloor heating systems, the maximum supply temperature is normally set between 35 and 45 °C.
>
> Check the max floor temperature with your floor supplier.

## ADJUSTMENT OF CURVE

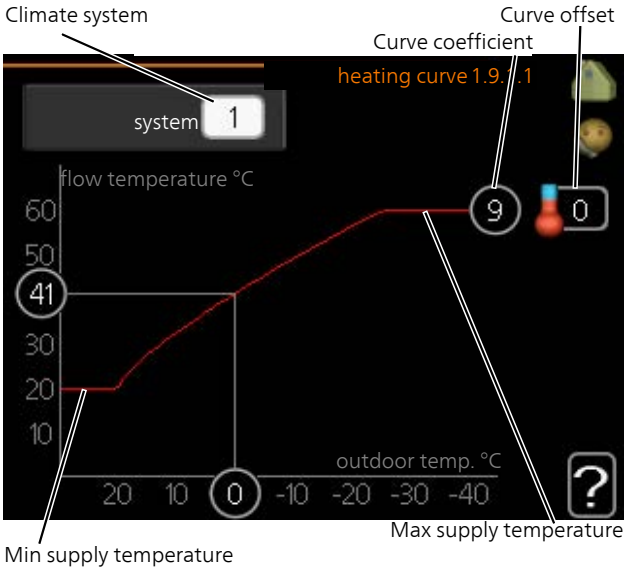


1. Select the climate system (if more than one) for which the curve is to be changed.
2. Select curve slope and curve offset.

> *Caution*
>
> If you need to adjust "min. flow line temp." and/or "max flow line temperature", you do this in other menus.
>
> Settings for "min. flow line temp." in menu 1.9.3.
>
> Settings for "max flow line temperature" in menu 5.1.2.

> *Caution*
>
> Curve 0 means that own curve is used.
>
> Settings for own curve are made in menu 1.9.7.

## TO READ OFF A HEATING CURVE

1. Turn the control knob so that the ring on the shaft with the outdoor temperature is marked.
2. Press the OK button.
3. Follow the grey line up to the curve and out to the left to read off the value for the supply temperature at the selected outdoor temperature.
4. You can now select to take read outs for different outdoor temperatures by turning the control knob to the right or left and read off the corresponding flow temperature.
5. Press the OK or Back button to exit read off mode.

# 7 Control - Introduction

## Display unit

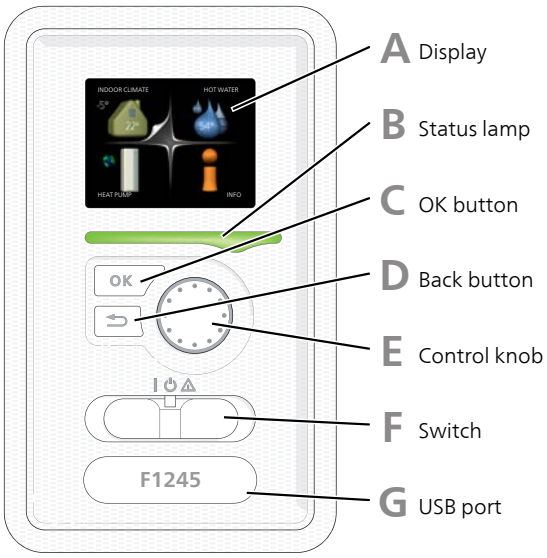


### A DISPLAY

Instructions, settings and operational information are shown on the display. You can easily navigate between the different menus and options to set the comfort or obtain the information you require.

### B STATUS LAMP

The status lamp indicates the status of the heat pump. It:

- lights green during normal operation.
- lights yellow in emergency mode.
- lights red in the event of a deployed alarm.

### C OK BUTTON

The OK button is used to:

- confirm selections of sub menus/options/set values/page in the start guide.

### D BACK BUTTON

The back button is used to:

- go back to the previous menu.
- change a setting that has not been confirmed.

### E CONTROL KNOB

The control knob can be turned to the right or left. You can:

- scroll in menus and between options.
- increase and decrease the values.
- change page in multiple page instructions (for example help text and service info).

### F SWITCH (SF1)

The switch assumes three positions:

- On (I)
- Standby (⏻)
- Emergency mode (⚠)

Emergency mode must only be used in the event of a fault on the heat pump. In this mode, the compressor switches off and the immersion heater engages. The heat pump display is not illuminated and the status lamp illuminates yellow.

### G USB PORT

The USB port is hidden beneath the plastic badge with the product name on it.

The USB port is used to update the software.

Visit nibeuplink.com and click the "Software" tab to download the latest software for your installation.

# Menu system

When the door to the heat pump is opened, the menu system's four main menus are shown in the display as well as certain basic information.

## MASTER

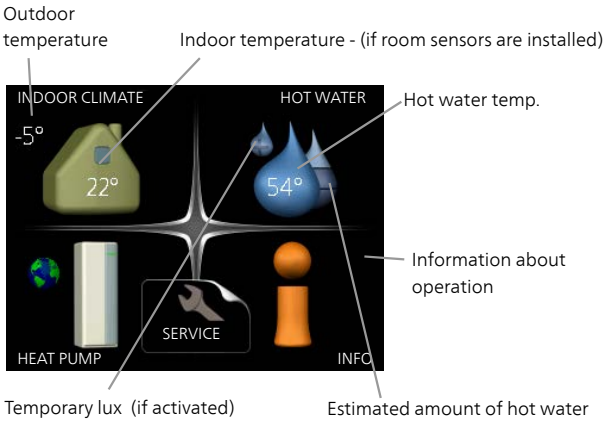


## SLAVE

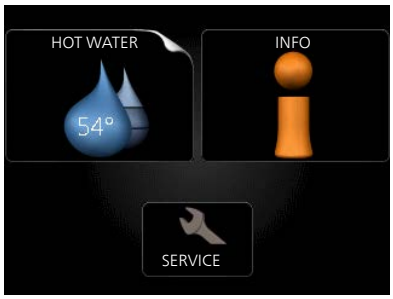


If the heat pump is set as slave a limited main menu is displayed because the majority of the settings for the system are made at the master heat pump.

## MENU 1 - INDOOR CLIMATE

Setting and scheduling the indoor climate. See information in the help menu or user manual.

## MENU 2 - HOT WATER

Setting and scheduling hot water production. See information in the help menu or user manual.

This menu is also set in the slave heat pump's limited menu system.

## MENU 3 - INFO

Display of temperature and other operating information and access to the alarm log. See information in the help menu or user manual.

This menu is also set in the slave heat pump's limited menu system.

## MENU 4 - HEAT PUMP

Setting time, date, language, display, operating mode etc. See information in the help menu or user manual.

## MENU 5 - SERVICE

Advanced settings. These settings are only intended for installers or service engineers. The menu is visible when the Back button is pressed for 7 seconds, when you are in the start menu. See page 46.

This menu is also set in the slave heat pump's limited menu system.

## SYMBOLS IN THE DISPLAY

The following symbols can appear in the display during operation.

| *Symbol* | *Description* |
|---|---|
| | This symbol appears by the information sign if there is information in menu 3.1 that you should note. |
| | These two symbols indicate whether the compressor or addition is blocked in F1245.<br>These can, for example, be blocked depending on which operating mode is selected in menu 4.2, if blocking is scheduled in menu 4.9.5 or if an alarm has occurred that blocks one of them.<br> Blocking the compressor.<br> Blocking additional heat. |
| | This symbol appears if periodic increase or lux mode for the hot water is activated. |
| | This symbol indicates whether "holiday setting" is active in 4.7. |
| | This symbol indicates whether F1245 has contact with NIBE Uplink. |
| | This symbol indicates the actual speed of the fan if the speed has changed from the normal setting.<br>Accessory needed. |
| | This symbol is visible in installations with active solar accessories. |
| | This symbol indicates whether pool heating is active.<br>Accessory needed. |
| | This symbol indicates whether cooling is active.<br>Accessory needed. |

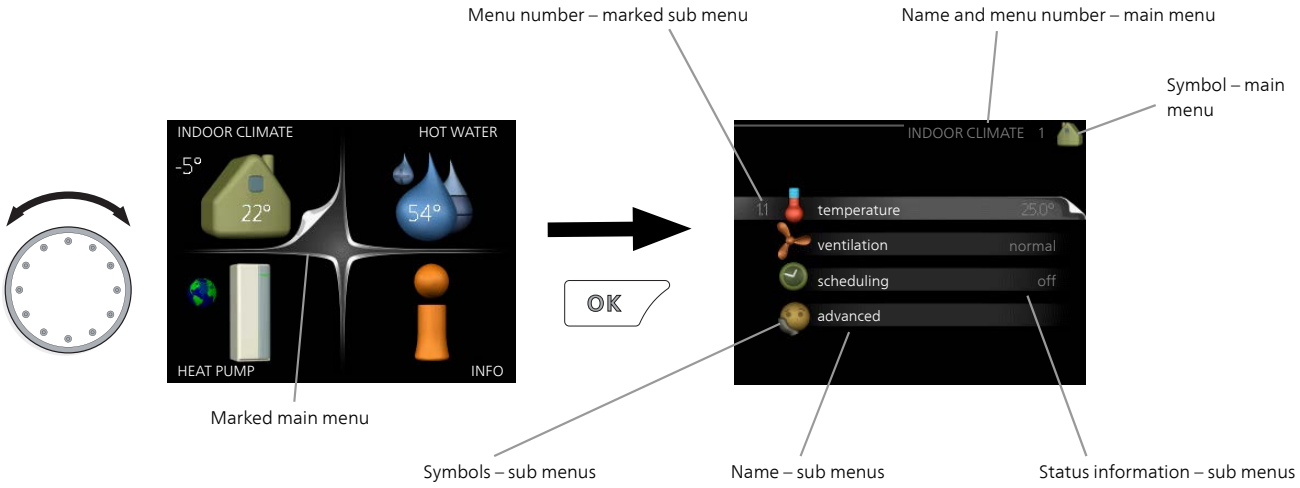


## OPERATION

To move the cursor, turn the control knob to the left or the right. The marked position is white and/or has a turned up tab.

## SELECTING MENU

To advance in the menu system select a main menu by marking it and then pressing the OK button. A new window then opens with sub menus.

Select one of the sub menus by marking it and then pressing the OK button.

## SELECTING OPTIONS

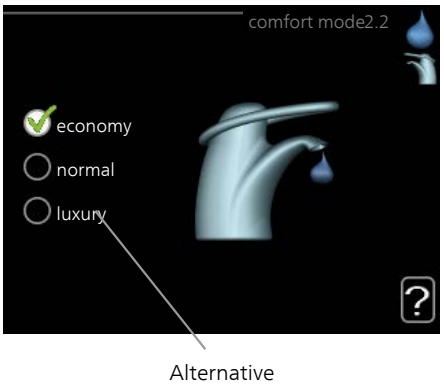


In an options menu the current selected option is indicated by a green tick.

To select another option:

1. Mark the applicable option. One of the options is pre-selected (white).
2. Press the OK button to confirm the selected option. The selected option has a green tick.

## SETTING A VALUE

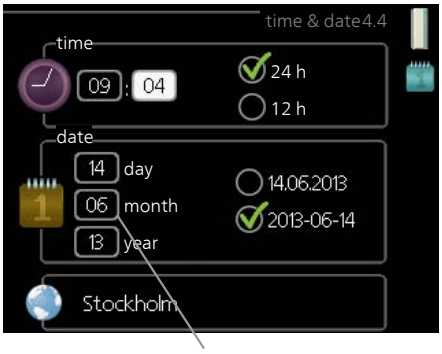


To set a value:

1. Mark the value you want to set using the control knob.

2. Press the OK button. The background of the value becomes green, which means that you have accessed the setting mode.

3. Turn the control knob to the right to increase the value and to the left to reduce the value.

4. Press the OK button to confirm the value you have set. To change and return to the original value, press the Back button.

## USE THE VIRTUAL KEYBOARD

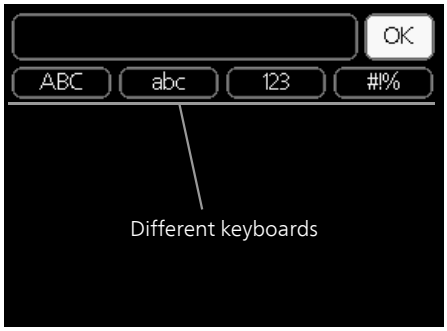


In some menus where text may require entering, a virtual keyboard is available.

Depending on the menu, you can gain access to different character sets which you can select using the control knob. To change character table, press the Back button. If a menu only has one character set the keyboard is displayed directly.

When you have finished writing, mark "OK" and press the OK button.

## SCROLL THROUGH THE WINDOWS

A menu can consist of several windows. Turn the control knob to scroll between the windows.

Current menu window

Number of windows in the menu

### *Scroll through the windows in the start guide*

Arrows to scroll through window in start guide

1. Turn the control knob until one of the arrows in the top left corner (at the page number) has been marked.
2. Press the OK button to skip between the steps in the start guide.

## HELP MENU

In many menus there is a symbol that indicates that extra help is available.

To access the help text:

1. Use the control knob to select the help symbol.
2. Press the OK button.

The help text often consists of several windows that you can scroll between using the control knob.

# 8 Control - Menus

## Menu 1 - INDOOR CLIMATE

- 1 - INDOOR CLIMATE
  - 1.1 - temperature
    - 1.1.1 - heating
    - 1.1.2 - cooling *
  - 1.2 - ventilation *
  - 1.3 - scheduling
    - 1.3.1 - heating
    - 1.3.2 - cooling *
    - 1.3.3 - ventilation *
  - 1.9 - advanced
    - 1.9.1 - curve
      - 1.9.1.1 heating curve
      - 1.9.1.2 - cooling curve *
    - 1.9.2 - external adjustment
    - 1.9.3 - min. flow line temp.
      - 1.9.3.1 - heating
      - 1.9.3.2 - cooling *
    - 1.9.4 - room sensor settings
    - 1.9.5 - cooling settings *
    - 1.9.6 - fan return time *
    - 1.9.7 - own curve
      - 1.9.7.1 - heating
      - 1.9.7.2 - cooling *
    - 1.9.8 - point offset
    - 1.9.9 – night cooling
    - 1.9.11 - +Adjust
    - 1.9.12 - FLM cooling*

## Menu 2 - HOT WATER

- 2 - HOT WATER, **
  - 2.1 - temporary lux
  - 2.2 - comfort mode
  - 2.3 - scheduling
  - 2.9 - advanced
    - 2.9.1 - periodic increase
    - 2.9.2 - hot water recirc.

## Menu 3 - INFO

- 3 - INFO **
  - 3.1 - service info **
  - 3.2 - compressor info **
  - 3.3 - add. heat info **
  - 3.4 - alarm log **
  - 3.5 - indoor temp. log

* Accessories are needed.

** This menu is also set in the slave heat pump's limited menu system.

# Menu 4 - HEAT PUMP

| | | | |
|---|---|---|---|
| 4 - HEAT PUMP | 4.1 - plus functions | 4.1.1 - pool * | |
| | | 4.1.2 - pool 2 * | |
| | | 4.1.3 - internet | 4.1.3.1 - NIBE Uplink |
| | | | 4.1.3.8 - tcp/ip settings |
| | | | 4.1.3.9 - proxy settings |
| | | 4.1.4 - sms * | |
| | | 4.1.5 - SG Ready | |
| | | 4.1.6 - smart price adaption™ | |
| | | 4.1.7 - smart home | |
| | | 4.1.8 - smart energy source™ | 4.1.8.1 - settings |
| | | | 4.1.8.2 - set. price |
| | | | 4.1.8.3 - CO2 impact |
| | | | 4.1.8.4 - tariff periods, electricity |
| | | | 4.1.8.5 - tariff periods, fixed price |
| | | | 4.1.8.6 - tariff per, ext. shunt add |
| | | | 4.1.8.7 - tariff per, ext. step add |
| | | | 4.1.8.8 - tariff periods, OPT10 |
| | | 4.1.11 - demand-contr. ventil. * | |
| | 4.2 - op. mode | | |
| | 4.3 - my icons | | |
| | 4.4 - time & date | | |
| | 4.6 - language | | |
| | 4.7 - holiday setting | | |
| | 4.9 - advanced | 4.9.1 - op. prioritisation | |
| | | 4.9.2 - auto mode setting | |
| | | 4.9.3 - degree minute setting | |
| | | 4.9.4 - factory setting user | |
| | | 4.9.5 - schedule blocking | |

* Accessory needed.

# Menu 5 - SERVICE

## OVERVIEW

| | | | |
|---|---|---|---|
| 5 - SERVICE ** | 5.1 - operating settings ** | 5.1.1 - hot water settings | |
| | | 5.1.2 - max flow line temperature | |
| | | 5.1.3 - max diff flow line temp. | |
| | | 5.1.4 - alarm actions | |
| | | 5.1.5 - fan sp. exhaust air * | |
| | | 5.1.7 - br pmp al set. | |
| | | 5.1.8 - operating mode brine pump ** | |
| | | 5.1.9 - brine pump speed ** | |
| | | 5.1.10 - op. mod heat med pump ** | |
| | | 5.1.11 - pump speed heating medium ** | |
| | | 5.1.12 - internal electrical addition | |
| | | 5.1.14 - flow set. climate system | |
| | | 5.1.22 - heat pump testing | |
| | 5.2 - system settings | 5.2.1 - master/slave mode ** | |
| | | 5.2.2 - installed slaves | |
| | | 5.2.3 - docking | |
| | | 5.2.4 - accessories | |
| | 5.3 - accessory settings | 5.3.1 - FLM * | |
| | | 5.3.2 - shunt controlled add. heat * | |
| | | 5.3.3 - extra climate system * | 5.3.3.X - climate system 2 - 8 * |
| | | 5.3.4 - solar heating * | |
| | | 5.3.6 - step controlled add. heat | |
| | | 5.3.8 - hot water comfort * | |
| | | 5.3.11 - modbus * | |
| | | 5.3.12 - exhaust/supply air module * | |
| | | 5.3.15 - GBM communications module * | |
| | | 5.3.16 - humidity sensor * | |
| | | 5.3.22 - photovol control* | |
| | 5.4 - soft in/outputs ** | | |
| | 5.5 - factory setting service ** | | |
| | 5.6 - forced control ** | | |
| | 5.7 - start guide ** | | |
| | 5.8 - quick start ** | | |
| | 5.9 - floor drying function | | |
| | 5.10 - change log ** | | |
| | 5.12 - country | | |

* Accessory needed.

** This menu is also set in the slave heat pump's limited menu system.

Go to the main menu and hold the Back button in for 7 seconds to access the Service menu.

### *Sub-menus*

Menu SERVICE has orange text and is intended for the advanced user. This menu has several sub-menus. Status information for the relevant menu can be found on the display to the right of the menus.

operating settings Operating settings for the heat pump.

system settings System settings for the heat pump, activating accessories etc.

accessory settings Operational settings for different accessories.

soft in/outputs Setting software controlled in and outputs on the input circuit board (AA3).

factory setting service Total reset of all settings (including settings available to the user ) to default values.

forced control Forced control of the different components in the heat pump.

start guide Manual start of the start guide which is run the first time the heat pump is started.

quick start Quick starting the compressor.

*NOTE*

Incorrect settings in the service menus can damage the heat pump.

## MENU 5.1 - OPERATING SETTINGS

Operating settings can be made for the heat pump in the sub menus.

## MENU 5.1.1 - HOT WATER SETTINGS

### *start temp. economy / normal / lux*

Setting range: 5 – 70 °C

Factory setting (°C):

| | *kW* | *eco-nomy* | *normal* | *luxury* |
|---|---|---|---|---|
| Enamel | 5 | 42 | 46 | 48 |
| | 6 | 42 | 46 | 48 |
| | 8 | 40 | 43 | 46 |
| | 10 | 38 | 41 | 44 |
| | 12 | 37 | 40 | 43 |
| Copper | 5 | 42 | 46 | 48 |
| | 6 | 42 | 46 | 48 |
| | 8 | 40 | 43 | 46 |
| | 10 | 38 | 41 | 44 |
| | 12 | 37 | 40 | 43 |
| Stainless | 5 | 42 | 46 | 48 |
| | 6 | 42 | 46 | 48 |
| | 8 | 40 | 43 | 46 |
| | 10 | 38 | 41 | 44 |
| | 12 | 37 | 40 | 43 |

### *stop temp. economy / normal / lux*

Setting range: 5 – 70 °C

Factory setting (°C):

| | *kW* | *eco-nomy* | *normal* | *luxury* |
|---|---|---|---|---|
| Enamel | 5 | 46 | 50 | 52 |
| | 6 | 46 | 50 | 52 |
| | 8 | 44 | 47 | 50 |
| | 10 | 42 | 45 | 48 |
| | 12 | 41 | 44 | 47 |
| Copper | 5 | 46 | 50 | 52 |
| | 6 | 46 | 50 | 52 |
| | 8 | 44 | 47 | 50 |
| | 10 | 42 | 45 | 48 |
| | 12 | 41 | 44 | 47 |
| Stainless | 5 | 46 | 50 | 52 |
| | 6 | 45 | 50 | 52 |
| | 8 | 44 | 47 | 50 |
| | 10 | 42 | 45 | 48 |
| | 12 | 41 | 44 | 47 |

### *stop temp. per. increase*

Setting range: 55 – 70 °C

Factory setting: 55 °C

Here you set the start and stop temperature of the hot water for the different comfort options in menu 2.2 as well as the stop temperature for periodic increase in menu 2.9.1.

If several compressors are available set the difference between engagement disengagement of them during hot water charging and fixed condensing.

## MENU 5.1.2 - MAX FLOW LINE TEMPERATURE

### *climate system*

Setting range: 20-80 °C

Default value: 60 °C

Set the maximum supply temperature for the climate system here. If the installation has more than one climate system, individual maximum supply temperatures can be set for each system. Climate systems 2 - 8 cannot be set to a higher max supply temperature than climate system 1.

*Caution*

For underfloor heating systems, max flow line temperature should normally be set to between 35 and 45°C.

Check the max floor temperature with your floor supplier.

## MENU 5.1.3 - MAX DIFF FLOW LINE TEMP.

*max diff compressor*

Setting range: 1 – 25 °C

Default value: 10 °C

*max diff addition*

Setting range: 1 – 24 °C

Default value: 7 °C

Here you set the maximum permitted difference between the calculated and actual supply temperature in the event of compressor or additional heat mode respectively. Max diff. additional heat can never exceed max diff. compressor

### *max diff compressor*

If the current supply temperature *exceeds* the calculated supply by set value, the degree minute value is set to +2. The compressor in the heat pump stops if there is only a heating demand.

### *max diff addition*

If "addition" is selected and activated in menu 4.2 and the current supply temperature *exceeds* the calculated temperature by the set value, the additional heat is forced to stop.

## MENU 5.1.4 - ALARM ACTIONS

Select how you want the heat pump to alert you that there is an alarm in the display here.

The different alternatives are that the heat pump stops producing hot water (default setting) and/or reduces the room temperature.

*Caution*

If no alarm action is selected, it can result in higher energy consumption in the event of an alarm.

## MENU 5.1.5 - FAN SP. EXHAUST AIR (ACCESSORY IS REQUIRED)

*normal and speed 1-4*

Setting range: 0 – 100 %

Set the speed for the five different selectable speeds for the fan here.

*Caution*

An incorrectly set ventilation flow can damage the house and may also increase energy consumption.

## MENU 5.1.7 - BR PMP AL SET.

*min. brine out*

Setting range: -12 – 15 °C

Default value: -8 °C

*max brine in*

Setting range: 10 – 30 °C

Default value: 30 °C

### *min. brine out*

Set the temperature at which the heat pump is to activate the alarm for low temperature in outgoing brine.

If "automatic reset" is selected, the alarm resets when the temperature has increased by 1 °C below the set value.

### *max brine in*

Set the temperature at which the heat pump is to activate the alarm for high temperature in incoming brine.

## MENU 5.1.8 - OPERATING MODE BRINE PUMP

*op. mode*

Setting range: intermittent, continuous, 10 days continuous

Default value: intermittent

Set the operating mode of the brine pump here.

*intermittent:* The brine pump starts approx. 20 seconds before and stops approx. 20 seconds after the compressor.

*continuous:* Continuous operation.

*10 days continuous:* Continuous operation for 10 days. The pump then shifts to intermittent operation.

*TIP*

You can use "10 days continuous" at start-up to obtain continuous circulation during a start-up time in order to make it easier to bleed the system.

## MENU 5.1.9 - BRINE PUMP SPEED

*op. mode*

Setting range: auto / manual / fixed delta

Default value: auto

*delta T*

Setting range: 2 - 10 °C

Factory setting: 4 °C

*speed in wait mode*

Setting range: 1 - 100 %

Factory setting: 70 %

*Speed extern. contr. (AUX)*

Setting range: 1 - 100 %

Factory setting: 100 %

*manual*

Setting range: 1 - 100 %

Factory setting: 100 %

*speed passive cooling (accessory is required)*

Setting range: 1 - 100 %

Factory setting: 75 %

*speed active cooling (accessory is required)*

Setting range: 1 - 100 %

Factory setting: 75 %

*speed in wait mode cooling*

Setting range: 1 - 100 %

Factory setting: 30 %

*temperature difference, active cooling*

Setting range: 2 - 10 °C

Factory setting: 5 °C

Set the speed of the brine pump here. Select "auto" if the speed of the brine pump is to be regulated automatically (factory setting) for optimal operation.

For manual operation of the brine pump, deactivate "auto" and set the value to between 1 and 100 %.

For operation of brine pump with "fixed delta", select "fixed delta" under "op. mode" and set the value between 2 and 10 °C.

If there are accessories for cooling, you can also set the brine pump's speed during passive cooling operation here (the brine pump then runs in manual operation).

This menu is also set in the slave heat pump's limited menu system.

## MENU 5.1.10 - OP. MOD HEAT MED PUMP

*op. mode*

Setting range: auto, intermittent

Default value: auto

Set the operating mode of the heating medium pump here.

*auto:* The heating medium pump runs according to the current operating mode for F1245.

*intermittent:* The heating medium pump starts approx. 20 seconds before, and stops at the same time as, the compressor.

## MENU 5.1.11 - PUMP SPEED HEATING MEDIUM

*Operating status*

Setting range: auto / manual

Default value: auto

*Manual setting, hot water*

Setting range: 1 - 100 %

Factory setting 6 kW: 40 %

Factory setting 8 kW Enamel: 55 %

Factory setting 8 kW Copper/Stainless steel: 40 %

Factory setting 10 kW Enamel: 70 %

Factory setting 10 kW Copper/Stainless steel: 55 %

Factory setting 12 kW Enamel: 100 %

Factory setting 12 kW Copper/Stainless steel: 70 %

*Manual setting, heating*

Setting range: 1 - 100 %

Default values: 70 %

*Manual setting, pool*

Setting range: 1 - 100 %

Default values: 70 %

*speed in wait mode*

Setting range: 1 - 100 %

Default values: 30 %

*min. allowed speed*

Setting range: 1 - 50%

Default values: 1 %

*max. allowed speed*

Setting range: 50 - 100 %

Default values: 100 %

*speed active cooling (accessory is required)*

Setting range: 1 - 100 %

Default values: 70 %

*speed passive cooling (accessory is required)*

Setting range: 1 - 100 %

Default values: 70 %

Set the speed at which the heating medium pump is to operate in the present operating mode. Select "auto" if the speed of the heating medium pump is to be regulated automatically (factory setting) for optimal operation.

If "auto" is activated for heating operation you can also make the setting "max. allowed speed" which restricts the heating medium pump and does not allow it to run at a higher speed than the set value.

For manual operation of the heating medium pump, deactivate "auto" for the current operating mode and set the value to between 0 and 100% (the previously set value for "max. allowed speed" no longer applies).

"*heating*" means heating operating mode for the heating medium pump.

"*speed in wait mode*" means heating or cooling operating mode for the heating medium pump, but when the heat pump requires neither compressor operation nor electric additional heat and slows down.

"*hot water*" means hot water operating mode for the heating medium pump.

"*pool*" (accessory required) means pool heating operating mode for the heating medium pump.

"*cooling*" (accessory required) means operating mode cooling for the heating medium pump.

If there are accessories for cooling present or if the heat pump has a built-in function for cooling you can also set the heating medium pump speed during active respectively cooling operating modes (the heating medium pump then runs in manual operation).

## MENU 5.1.12 - INTERNAL ELECTRICAL ADDITION

*max connected el. add.*

Setting range: 7 / 9

Default value: 7

*set max electrical add.*

Setting range: 0 - 9 kW

Factory setting: 6 kW

*fuse size*

Setting range: 1 - 200 A

Factory setting: 16 A

*transformation ratio*

Setting range: 300 - 3000

Factory setting: 300

Here you set the max. electrical output of the internal electrical addition in F1245 and the fuse size for the installation.

Here you can also check which current sensor is installed on which incoming phase to the property (this requires current sensors to be installed, see page 27). Check by marking "detect phase order" and pressing the OK button.

The results of these checks appear just below the menu selection "detect phase order".

## MENU 5.1.14 - FLOW SET. CLIMATE SYSTEM

*presettings*

Setting range: radiator, floor heat., rad. + floor heat., DOT °C

Default value: radiator

Setting range DOT: -40.0 – 20.0 °C

Factory setting DOT: -18.0 °C

*own setting*

Setting range dT at DOT: 0.0 – 25.0

Factory setting dT at DOT: 10.0

Setting range DOT: -40.0 – 20.0 °C

Factory setting DOT: -18.0 °C

The type of heating distribution system the heating medium pump (GP1) works towards is set here.

dT at DOT is the difference in degrees between flow and return temperatures at dimensioned outdoor temperature.

## MENU 5.1.22 - HEAT PUMP TESTING

*NOTE*

This menu is intended for testing F1245 according to different standards.

Use of this menu for other reasons may result in your installation not functioning as intended.

This menu contains several sub-menus, one for each standard.

## MENU 5.2 - SYSTEM SETTINGS

Make different system settings for the heat pump here, e.g. master/slave settings, docking settings and which accessories are installed.

## MENU 5.2.1 - MASTER/SLAVE MODE

Setting range: master, slave 1-8

Default value: master

Set the heat pump as master- or slave unit. In systems with one heat pump it must be "master".

*Caution*

In systems with several heat pumps, each pump is allocated a unique ID. In other words, only one heat pump can be "master" and only one can be "slave 5".

## MENU 5.2.2 - INSTALLED SLAVES

Set which slaves are connected to the master heat pump.

There are two ways of activating connected slaves. You can either mark the alternative in the list or use the automatic function "search installed slaves".

### *search installed slaves*

Mark "search installed slaves" and press the OK button to automatically find connected slaves for the master heat pump.

*NOTE*

Before these settings are made, each slave must have received a unique ID (see menu 5.2.1).

## MENU 5.2.3 - DOCKING

Enter how your system is docked regarding pipes, for example to pool heating, hot water heating and building heating. The menu is only displayed if at least one slave is connected to the master.

This menu has a docking memory which means that the control system remembers how a particular reversing valve is docked and automatically enters the correct docking the next time you use the same reversing valve.

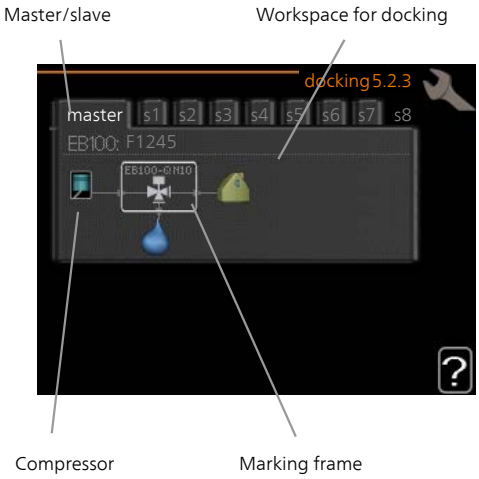


*Master/slave:* Select the heat pump for which the docking setting is to be made (if there is only one heat pump in the system, only master is displayed).

*Compressor:* Here, you select whether the compressor is blocked, externally controlled via soft input or standard (docked for example to pool heating, hot water charging and heating the building).

*Marking frame:* Move around the marking frame using the control knob. Use the OK button to select what you want to change and to confirm the setting in the options box that appears to the right.

*Workspace for docking:* The system docking is drawn here.

| *Symbol* | *Description* |
|---|---|
| | Compressor (blocked) |
| | Compressor (externally controlled) |
| | Compressor (standard) |
| | Reversing valves for hot water, cooling respectively pool control.<br>The designations above the reversing valve indicate where it is electrically connected (EB100 = Master, EB101 = Slave 1, CL11 = Pool 1 etc.). |
| | Own hot water charging, only from selected heat pump compressor. Controlled by relevant heat pump. |
| | Pool 1 |

| Symbol | Description |
|---|---|
| | Pool 2 |
| | Heating (heating the building, includes any extra climate system) |
| | Cooling |

## MENU 5.2.4 - ACCESSORIES

Inform the heat pump which accessories are installed here.

There are two ways of activating connected accessories. You can either mark the alternative in the list or use the automatic function "search installed acc.".

### *search installed acc.*

Mark "search installed acc." and press the OK button to automatically find connected accessories for F1245.

> *Caution*
>
> Certain accessories are not found with the search function, but must be selected instead in menu 5.4.

> *NOTE*
>
> Only mark the option for ground water pump if the accessory AXC 40 is to be used to control the circulation pump.

## MENU 5.3 - ACCESSORY SETTINGS

The operating settings for accessories that are installed and activated are made in the sub-menus for this.

## MENU 5.3.1 - FLM

### *continuous pump op.*

Setting range: on/off

Factory setting: off

### *pump speed*

Setting range: 1 – 100%

Factory setting: 100%

### *time between defrosts*

Setting range: 1 – 30 h

Default value: 10 h

### *months btwn filter alarms*

Setting range: 1 – 12

Default value: 3

### *activate cooling*

Setting range: on/off

Factory setting: off

### *max. fan speed*

Setting range: 1 – 100%

Factory setting: 70 %

### *min. fan speed*

Setting range: 1 – 100%

Factory setting: 60 %

### *contr. sensor*

Setting range: 0 – 4

Factory setting: 1

### *time between speed changes*

Setting range: 1 – 12

Factory setting: 10 min

*continuous pump op.:* Select for continuous operation of the circulation pump in the exhaust air module.

*pump speed:* Set the desired speed for the circulation pump in the exhaust air module.

*time between defrosts:* Here, you can set the minimum time that must pass between defrosts of the heat exchanger in the exhaust air module.

When the exhaust air module is in operation the heat exchanger is cooled so that ice builds up on it. When too much ice builds up the heat transfer capacity of the heat exchanger is reduced and defrosting is required. Defrosting warms up the heat exchanger so that the ice melts and runs off via the condensation hose.

*months btwn filter alarms:* Here, you can set how many months should pass before the heat pump notifies that it is time to clean the filter in the exhaust air module.

Clean the exhaust air module's air filter regularly, how often depends on the amount of dust in the ventilation air.

*activate cooling:* Here, you can activate cooling via the exhaust air module. When the function has been activated, the cooling settings are displayed in the menu system.

*Caution*

The following menus require the accessory HTS 40 and that "demand-contr. ventil." is activated in menu 4.1.11.

*max. fan speed:* Here, you set the highest permitted fan speed during demand-controlled ventilation.

*min. fan speed:* Here, you set the lowest permitted fan speed during demand-controlled ventilation.

*contr. sensor 1 – 4:* Here, you select which exhaust air module(s) will be affected by which HTS unit(s). If two or more HTS units control an exhaust air module, the ventilation is adjusted base on the units' average value.

*time between speed changes:* Here, you set the time it takes for the exhaust air module to increase/decrease the fan speed step-by-step until the desired relative humidity is obtained. At the factory setting, the fan speed is adjusted by one percentage point every ten minutes.

*TIP*

See the accessory installation instructions for function description.

## MENU 5.3.2 - SHUNT CONTROLLED ADD. HEAT

*prioritised additional heat*

Setting range: on/off

Factory setting: off

*start diff additional heat*

Setting range: 0 – 2000 DM

Default values: 400 DM

*minimum running time*

Setting range: 0 – 48 h

Default value: 12 h

*min temp.*

Setting range: 5 – 90 °C

Default value: 55 °C

*mixing valve amplifier*

Setting range: 0.1 –10.0

Default value: 1.0

*mixing valve step delay*

Setting range: 10 – 300 s

Default values: 30 s

Set when the addition is to start, the minimum run time and the minimum temperature for external addition with shunt here. External addition with shunt is for example a wood/oil/gas/pellet boiler.

You can set shunt valve amplification and shunt valve waiting time.

Selecting "prioritised additional heat" uses the heat from the external additional heat instead of the heat pump. The shunt valve is regulated as long as heat is available, otherwise the shunt valve is closed.

*TIP*

See the accessory installation instructions for function description.

## MENU 5.3.3 - EXTRA CLIMATE SYSTEM

*use in heating mode*

Setting range: on/off

Factory setting: on

*use in cooling mode*

Setting range: on/off

Factory setting: off

*mixing valve amplifier*

Setting range: 0.1 – 10.0

Default value: 1.0

*mixing valve step delay*

Setting range: 10 – 300 s

Default values: 30 s

*Contr. pump GP10*

Setting range: on/off

Factory setting: off

Here, you select which climate system (2 - 8) you wish to set.

*use in heating mode:* If the heat pump is connected to a climate system(s) for cooling, any condensation can take place in this/these. Check that "use in heating mode" has been selected for the climate system(s) that

is/are not adapted for cooling. This setting means that the sub-shunt for the extra climate system closes when cooling operation is activated.

*use in cooling mode:* Select "use in cooling mode" for climate systems that are adapted to handle cooling. For 2-pipe cooling you can select both "use in cooling mode" and "use in heating mode", while for 4-pipe cooling you can only select one option.

> *Caution*
>
> This setting option only appears if the heat pump is activated for cooling operation in menu 5.2.4..

*mixing valve amplifier, mixing valve step delay:* Here, you set the shunt amplification and shunt waiting time for the various extra climate systems that are installed.

*Contr. pump GP10:* Here, you can set the speed of the circulation pump manually.

See the accessory installation instructions for function description.

## MENU 5.3.4 - SOLAR HEATING

*start delta-T*

Setting range: 1 – 40 °C

Default value: 8 °C

*stop delta-T*

Setting range: 0 – 40 °C

Default value: 4 °C

*max. tank temperature*

Setting range: 5 – 110 °C

Default value: 95 °C

*max. solar collector temp.*

Setting range: 80 – 200 °C

Default value: 125 °C

*anti-freeze temperature*

Setting range: -20 – +20 °C

Default value: 2 °C

*start solar collector cooling*

Setting range: 80 – 200 °C

Default value: 110 °C

*passive recharging - activation temperature*

Setting range: 50 – 125 °C

Factory setting: 110 °C

*passive recharging - deactivation temperature*

Setting range: 30 – 90 °C

Factory setting: 50 °C

*active recharging - activating dT*

Setting range: 8 – 60 °C

Factory setting: 40 °C

*active recharging - deactivating dT*

Setting range: 4 – 50 °C

Factory setting: 20 °C

*start delta-T, stop delta-T*: Here, you can set the temperature difference between solar panel and solar tank at which the circulation pump will start and stop.

*max. tank temperature, max. solar collector temp.*: Here, you can set the maximum temperatures in the tank and solar panel respectively at which the circulation pump will stop. This is to protect against excess temperatures in the solar tank.

If the unit has an anti-freeze function, solar panel cooling and/or passive/active recharging you can activate them here. When the function has been activated, you can

make settings for them. "solar panel cooling", "passive recharging" and "active recharging" cannot be combined, only one function can be activated.

### *freeze protection*

*anti-freeze temperature*: Here, you can set the temperature in the solar panel at which the circulation pump is to start to prevent freezing.

### *solar panel cooling*

*start solar collector cooling*: If the temperature in the solar panel is higher than this setting, at the same time as the temperature in the solar tank is higher than the set maximum temperature, the external function for cooling is activated.

### *passive recharging*

*activation temperature*: If the temperature in the solar panel is higher than this setting, the function is activated. However, the function is blocked for an hour if the temperature of the brine entering the heat pump (BT10) is higher than the set value for "max brine in" in menu 5.1.7.

*deactivation temperature*: If the temperature in the solar panel is lower than this setting, the function is deactivated.

### *active recharging*

*activating dT*: If the difference between the temperature in the solar panel (BT53) and the temperature of the brine entering the heat pump (BT10) is greater than this setting, the function is activated. However, the function is blocked for an hour if the temperature of the brine entering the heat pump (BT10) is higher than the set value for "max brine in" in menu 5.1.7.

*deactivating dT*: If the difference between the temperature in the solar panel (BT53) and the temperature of the brine entering the heat pump (BT10) is lower than this setting, the function is deactivated.

See the accessory installation instructions for function description.

## MENU 5.3.6 - STEP CONTROLLED ADD. HEAT

### *start diff additional heat*

Setting range: 0 – 2000 DM

Default values: 400 DM

### *diff. between additional steps*

Setting range: 0 – 1000 DM

Default values: 100 DM

### *max step*

Setting range
(binary stepping deactivated): 0 – 3

Setting range
(binary stepping activated): 0 – 7

Default value: 3

### *binary stepping*

Setting range: on/off

Factory setting: off

Make settings for step controlled addition here. Step controlled addition is for example an external electric boiler.

It is possible, for example, to select when the additional heat is to start, to set the maximum number of permitted steps and whether binary stepping is to be used.

When binary stepping is deactivated (off), the settings refer to linear stepping.

See the accessory installation instructions for function description.

## MENU 5.3.8 - HOT WATER COMFORT

### *activating the mixing valve*

Setting range: on/off

Factory setting: off

### *outgoing hot water*

Setting range: 40 - 65 °C

Default value: 55 °C

### *mixing valve amplifier*

Setting range: 0.1 – 10.0

Default value: 1.0

### *mixing valve step delay*

Setting range: 10 – 300 s

Default values: 30 s

Make settings for the hot water comfort here.

See the accessory installation instructions for function description.

*activating the mixing valve*: Activated if mixer valve is installed and it is to be controlled from F1245. When the option is active, you can set the outgoing hot water temperature, shunt amplification and shunt waiting time for the mixer valve.

*outgoing hot water*: Here, you can set the temperature at which the mixer valve is to restrict hot water from the water heater.

## MENU 5.3.11 - MODBUS

*address*

Factory setting: address 1

*word swap*

Factory setting: not activated

As from Modbus 40 version 10, the address can be set between 1 - 247. Earlier versions have a fixed address (address 1).

Here, you can select if you want to have "word swap" instead of the preset standard "big endian".

See the accessory installation instructions for function description.

## MENY 5.3.12 - EXHAUST/SUPPLY AIR MODULE

*months btwn filter alarms*

Setting range: 1 – 24

Default value: 3

*lowest extract air temp.*

Setting range: 0 – 10 °C

Default value: 5 °C

*bypass at excess temperature*

Setting range: 2 – 10 °C

Default value: 4 °C

*bypass during heating*

Setting range: on/off

Factory setting: off

*cut-out value, exh. air temp.*

Setting range: 5 – 30 °C

Default value: 25 °C

*max. fan speed*

Setting range: 0 – 100%

Factory setting: 75 %

*min. fan speed*

Setting range: 0 – 100%

Factory setting: 60 %

*control sensor 1 (HTS)*

Setting range: 1 – 4

Default value: 1

*months btwn filter alarms*: Set how often the filter alarm is to be displayed.

*lowest extract air temp.*: Set the minimum extract air temperature to prevent the heat exchanger freezing.

*bypass at excess temperature*: If a room sensor is installed, set the excess temperature at which the bypass damper is to open here.

*Caution*

The following menus require the accessory HTS 40 and that "demand-contr. ventil." is activated in menu 4.1.11.

*max. fan speed:* Here, you set the highest permitted fan speed during demand-controlled ventilation.

*min. fan speed:* Here, you set the lowest permitted fan speed during demand-controlled ventilation.

*contr. sensor 1 – 4:* Here, you select which exhaust air module(s) will be affected by which HTS unit(s). If two or more HTS units control an exhaust air module, the ventilation is adjusted base on the units' average value.

*time between speed changes:* Here, you set the time it takes for the exhaust air module to increase/decrease the fan speed step-by-step until the desired relative humidity is obtained. At the factory setting, the fan speed is adjusted by one percentage point every ten minutes.

*TIP*

See the installation instructions for ERS and HTS for a function description.

## MENU 5.3.15 - GBM COMMUNICATION MODULE

*start diff additional heat*

Setting range: 10 – 2,000 DM

Factory setting: 400 DM

*hysteresis*

Setting range: 10 – 2,000 DM

Factory setting: 100 DM

Make settings for the gas boiler GBM 10-15 here. For example . you can select when the gas boiler is to start. See the accessory installation instructions for a description of function.

## MENU 5.3.16 - HUMIDITY SENSOR

*climate system 1 HTS*

Setting range: 1–4

Default value: 1

*limit RH in the room, syst.*

Setting range: on/off

Factory setting: off

*prevent condensation, syst.*

Setting range: on/off

Factory setting: off

*limit RH in the room, syst.*

Setting range: on/off

Factory setting: off

Up to four humidity sensors (HTS 40) can be installed.

Here you select whether your system(s) is/are to limit the relative humidity level (RH) during heating or cooling operation.

You can also choose to limit min. cooling supply and calculated cooling supply to prevent condensation on pipes and components in the cooling system.

See the Installer Manual for HTS 40 for function description.

## MENU 5.3.22 - PHOTOVOL CONTROL

*affect room temperature*

Setting range: on/off

Factory setting: off

*affect hot water*

Setting range: on/off

Factory setting: off

Here you set whether you want EME 10 to affect the room temperature and / or the hot water.

See the accessory installation instructions for function description.

## MENU 5.4 - SOFT IN/OUTPUTS

Here, you state where the external switch function has been connected to the terminal block, either to one of 5 AUX inputs or to output AA3-X7.

## MENU 5.5 - FACTORY SETTING SERVICE

All settings can be reset (including settings available to the user) to default values here.

*Caution*

When resetting, the start guide is displayed the next time the heat pump is restarted.

## MENU 5.6 - FORCED CONTROL

You can force control the different components in the heat pump and any connected accessories here.

*NOTE*

Forced control is only intended to be used for troubleshooting purposes. Using the function in any other way may cause damage to the components in your climate system.

## MENU 5.7 - START GUIDE

When the heat pump is started for the first time the start guide starts automatically. Start it manually here.

See page 33 for more information about the start guide.

## MENU 5.8 - QUICK START

It is possible to start the compressor from here.

*Caution*

There must be a heating, cooling or hot water demand to start the compressor.

*NOTE*

Do not quick start the compressor too many times over a short period of time, as this could damage the compressor and its surrounding equipment.

## MENU 5.9 - FLOOR DRYING FUNCTION

*length of period 1 – 7*

Setting range: 0 – 30 days

Factory setting, period 1 – 3, 5 – 7: 2 days

Factory setting, period 4: 3 days

*temp. period 1 – 7*

Setting range: 15 – 70 °C

Default value:

| | |
|---|---|
| temp. period 1 | 20 °C |
| temp. period 2 | 30 °C |
| temp. period 3 | 40 °C |
| temp. period 4 | 45 C |
| temp. period 5 | 40 °C |
| temp. period 6 | 30 °C |
| temp. period 7 | 20 °C |

Set the function for under floor drying here.

You can set up to seven period times with different calculated flow temperatures. If less than seven periods are to be used, set the remaining period times to 0 days.

Mark the active window to activate the underfloor drying function. A counter at the bottom shows the number of days the function has been active. The function counts degree minutes as during normal heating operation but for the supply temperatures that are set for the respective period.

*NOTE*

During under floor drying, the heating medium pump in 100% runs, regardless of the setting in menu 5.1.10.

*TIP*

If operating mode "add. heat only" is to be used, select it in menu 4.2.

For a more even flow temperature the addition can be started earlier by setting "start for addition" in menus 4.9.2 to -80. When set under floor drying periods have stopped, reset the menus 4.2 and 4.9.2 as per previous settings.

*TIP*

It is possible to save a floor drying log that shows when the concrete slab has reached the correct temperature. See section "Logging floor drying" on page 64.

## MENU 5.10 - CHANGE LOG

Read off any previous changes to the control system here.

The date, time, ID no. (unique to particular setting) and the new set value are shown for every change.

*Caution*

The change log is saved at restart and remains unchanged after factory setting.

## 5.12 - COUNTRY

Select here the country in which the product was installed. This allows access to country-specific settings in your product.

Language settings can be made regardless of this selection.

*Caution*

This option locks after 24 hours, after restarting the display or program updating.

# 9 Service

## Service actions

> ⚠ *NOTE*
>
> Servicing should only be carried out by persons with the necessary expertise.
>
> When replacing components on F1245 only replacement parts from NIBE may be used.

### EMERGENCY MODE

> ⚠ *NOTE*
>
> The switch (SF1) must not be moved to "I" or "⚠" until F1245 has been filled with water. Component parts in the product can be damaged.

Emergency mode is used in event of operational interference and in conjunction with service. Hot water is not produced in emergency mode.

Emergency mode is activated by setting switch (SF1) in mode "⚠". This means that:

- The status lamp illuminates yellow.
- The display is not lit and the control computer is not connected.
- The temperature at the immersion heater is controlled by the thermostat (FQ10). It can be set either to 35 or 45 °C.
- The compressor and the brine system are off and only the heating medium pump and the electric additional heat are active. The additional heat power in emergency mode is set in the immersion heater board (AA1). See page 25 for instructions.

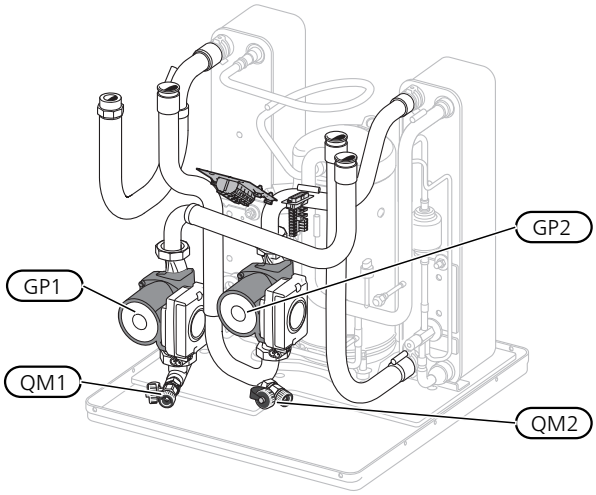


The image shows an example of what a cooling section could look like.

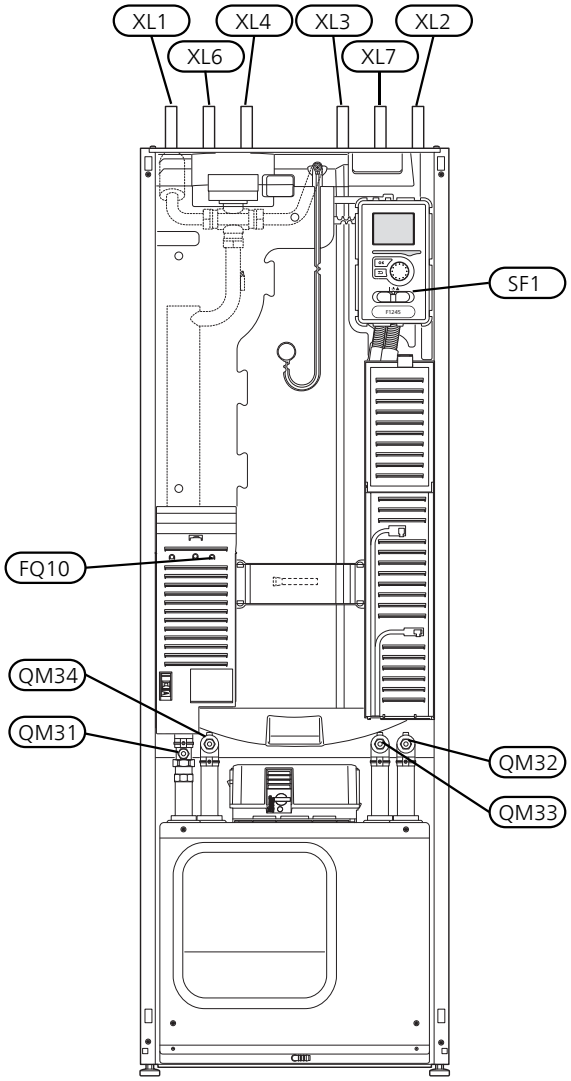


## DRAINING THE HOT WATER HEATER

The siphon principle is used to empty the hot water heater. This can be done either via the drain valve on the incoming cold water pipe or by inserting a hose into the cold water connection.

## DRAINING THE CLIMATE SYSTEM

In order to carry out service on the climate system, it may be easier to drain the system first. This can be done in different ways depending on what needs doing:

> ⚠ *NOTE*
>
> There may be some hot water when draining the heating medium side/climate system. There is a risk of scalding.

### *Draining the heating medium side in the cooling module*

If, for example, the heating medium pump requires replacing or the cooling module requires servicing, drain the heating medium side as follows:

1. Close the shut-off valves to heating medium side (QM31) and (QM32).
2. Connect a hose to the bleed valve (QM1) and open the valve. Some liquid will run out.
3. Air must get into the system for the remaining liquid to run out. To let in air, slacken off the connection slightly at the shut-off valve (QM32) that joins the heat pump with the cooling module.

When the heating medium side is empty, the required service can be carried out and/or replacement of any components carried out.

### *Draining the heating medium system in the heat pump*

If F1245 requires servicing, drain the heating medium side as follows:

1. Close the shut-off valves outside the heat pump for the heating medium side (return and flow line).
2. Connect a hose to the bleed valve (QM1) and open the valve. Some liquid will run out.
3. Air must get into the system for the remaining liquid to run out. To let in air, slacken off the connection slightly at the shut-off valve that joins the heat pump with the cooling module (XL2).

When the heating medium side is empty, the required service can be carried out.

### *Draining the entire climate system*

If the entire climate system requires draining, do this as follows:

1. Connect a hose to the bleed valve (QM1) and open the valve. Some liquid will run out.
2. Air must get into the system for the remaining liquid to run out. To allow air in, unscrew the bleed screw on the highest radiator in the house.

When the climate system is empty, the required service can be carried out.

## EMPTYING THE BRINE SYSTEM

In order to service the brine system it may be easier to drain the system first. This can be done in different ways depending on what needs doing:

### *Draining the brine system in the cooling module*

If, for example, the brine pump requires replacing or the cooling module requires servicing, drain the brine system by:

1. Close the shut-off valves to brine system (QM33) and (QM34).
2. Connect a hose to the drain valve (QM2), place the other opening of the hose in a container and open the valve. A small amount of brine will flow into the container.
3. Air must get into the system in order for the remaining brine to run out. To let in air, slacken off the connection slightly at the shut-off valve (QM33) that joins the heat pump with the cooling module.

When the brine system is empty, the required service can be carried out.

### *Draining the brine system in the heat pump*

If the heat pump requires servicing, drain the brine system by:

1. Close the shut-off valve outside the heat pump for the brine system.
2. Connect a hose to the drain valve (QM2), place the other opening of the hose in a container and open the valve. A small amount of brine will flow into the container.
3. Air must get into the system for the remaining brine to run out. To let in air, slacken off the connection slightly at the shut-off valve that joins the brine side with the heat pump at connection (XL7).

When the brine system is empty, the required service can be carried out.

## HELPING THE CIRCULATION PUMP TO START (GP1)

> ⚠ *NOTE*
>
> Help starting the heating medium pump (GP1) only applies to F1245 -6 at -12 kW.

1. Turn off F1245 by setting the switch (SF1) to "⏻".
2. Remove the front cover
3. Remove the cover for the cooling module.
4. Loosen the venting screw (QM5) with a screwdriver. Hold a cloth around the screwdriver blade as a small amount of water may run out.
5. Insert a screwdriver and turn the pump motor around.
6. Screw in the venting screw (QM5).
7. Start F1245 by setting the switch (SF1) to "I" and check that the circulation pump is working.

It is usually easier to start the circulation pump with F1245 running, and with the switch (SF1) set to "I". If the circulation pump is helped to start while F1245 is running, be prepared for the screwdriver to jerk when the pump starts.

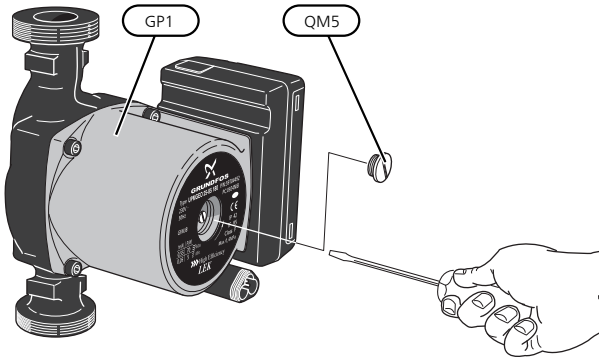


The image shows an example of what a circulation pump can look like.

## TEMPERATURE SENSOR DATA

| *Temperature (°C)* | *Resistance (kOhm)* | *Voltage (VDC)* |
|---|---|---|
| -40 | 351.0 | 3.256 |
| -35 | 251.6 | 3.240 |
| -30 | 182.5 | 3.218 |
| -25 | 133.8 | 3.189 |
| -20 | 99.22 | 3.150 |
| -15 | 74.32 | 3.105 |
| -10 | 56.20 | 3.047 |
| -5 | 42.89 | 2.976 |
| 0 | 33.02 | 2.889 |
| 5 | 25.61 | 2.789 |
| 10 | 20.02 | 2.673 |
| 15 | 15.77 | 2.541 |
| 20 | 12.51 | 2.399 |
| 25 | 10.00 | 2.245 |
| 30 | 8.045 | 2.083 |
| 35 | 6.514 | 1.916 |
| 40 | 5.306 | 1.752 |
| 45 | 4.348 | 1.587 |
| 50 | 3.583 | 1.426 |
| 55 | 2.968 | 1.278 |
| 60 | 2.467 | 1.136 |
| 65 | 2.068 | 1.007 |
| 70 | 1.739 | 0.891 |
| 75 | 1.469 | 0.785 |
| 80 | 1.246 | 0.691 |
| 85 | 1.061 | 0.607 |
| 90 | 0.908 | 0.533 |
| 95 | 0.779 | 0.469 |
| 100 | 0.672 | 0.414 |

## PULLING OUT THE COOLING MODULE

The cooling module can be pulled out for service and transport.

*NOTE*

Switch off the heat pump and cut the power with the safety switch.

*Caution*

Remove the front cover according to the description on page 8.

1. Close the shut-off valves (QM31), (QM32), (QM33) and (QM34).

   Drain the compressor module according to the instructions on page 60

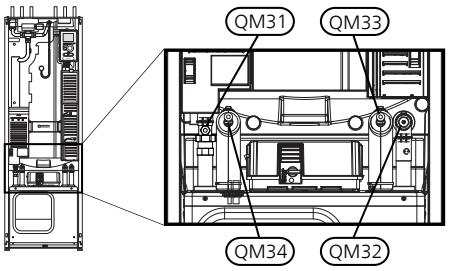


2. Pull off the lock catches.
3. Disconnect the pipe connection under the shut-off valve (QM31).

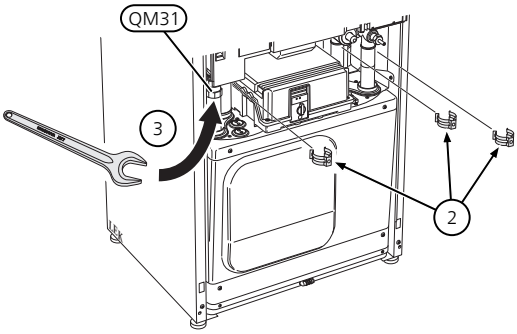


4. Remove the two screws.

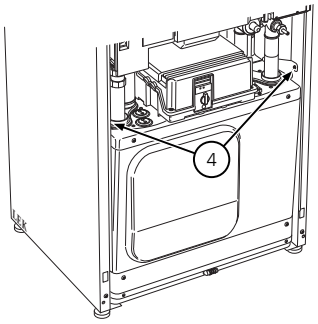


5. Remove the connections from the base card (AA2) using a screwdriver.

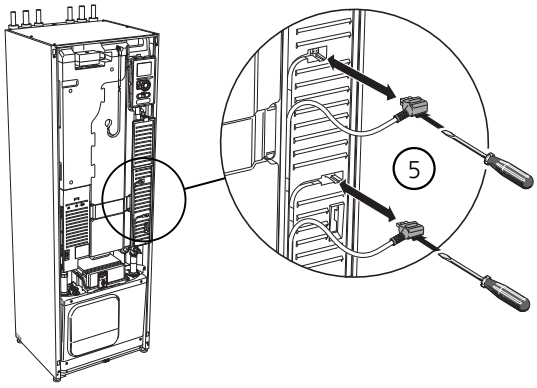


6. Disconnect the connectors (A) and (B) from the underside of the base card cabinet.

7. Disconnect the connector (C) from the electric addition PCB (AA1) using a screwdriver.
8. Disconnect the switch (D) from the joint board (AA100).
9. Carefully pull out the cooling module.

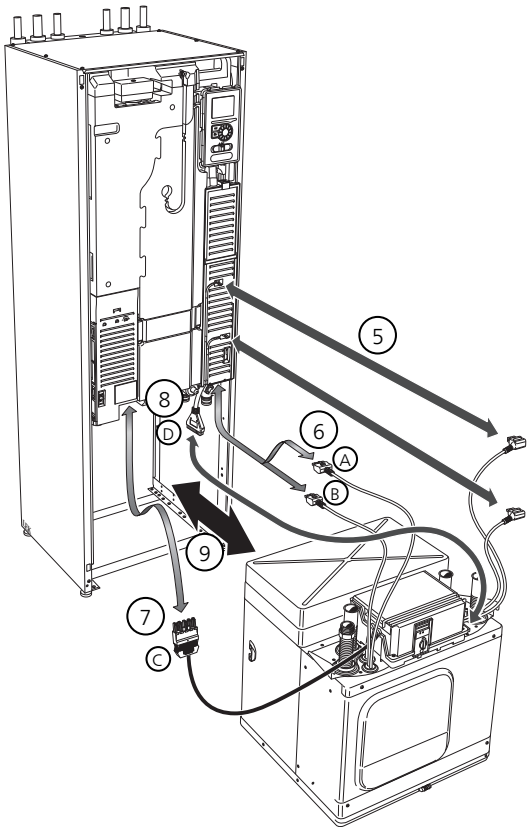


*TIP*

The cooling module is installed in reverse order.

*NOTE*

At reinstallation, the supplied O-rings must replace the existing ones at the connections to the heat pump (see image).

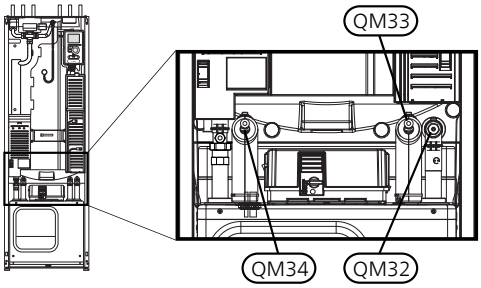


## USB SERVICE OUTLET

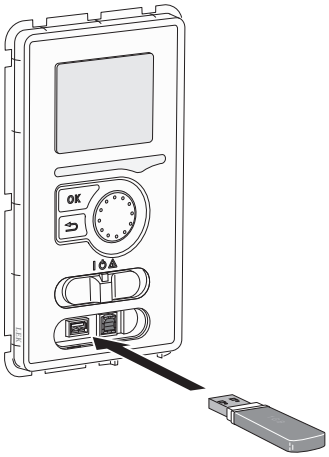


The display unit is equipped with a USB socket that can be used to update the software and save logged information in F1245.

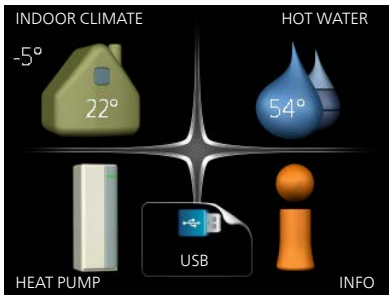

When a USB memory is connected, a new menu (menu 7) appears in the display.

### *Menu 7.1 - update firmware*

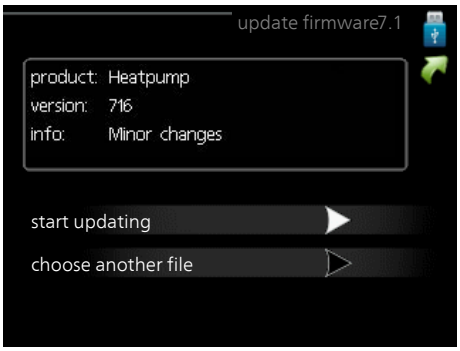


This allows you to update the software in F1245.

*NOTE*

For the following functions to work the USB memory must contain files with software for F1245 from NIBE.

The fact box at the top of the display shows information (always in English) of the most probable update that the update software has selected form the USB memory.

This information states the product for which the software is intended, the software version and general information about it. If you want a file other than the one selected, the correct file can be selected through "choose another file".

*start updating*

Select "start updating" if you want to start the update. You are asked whether you really want to update the software. Respond "yes" to continue or "no" to undo.

If you responded"yes" to the previous question the update starts and you can now follow the progress of the update on the display. When the update is complete F1245 restarts.

*TIP*

A software update does not reset the menu settings in F1245.

*Caution*

If the update is interrupted before it is complete (for example power cut etc.), the software can be reset to the previous version if the OK button is held in during start up until the green lamp starts to illuminate (takes about 10 seconds).

*choose another file*

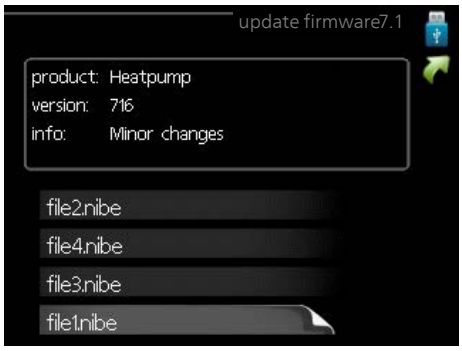


Select "choose another file" if you do not want to use the suggested software. When you scroll through the files, information about the marked software is shown in a fact box just as before. When you have selected a file with the OK button you will return to the previous page (menu 7.1) where you can choose to start the update.

## *Menu 7.2 - logging*

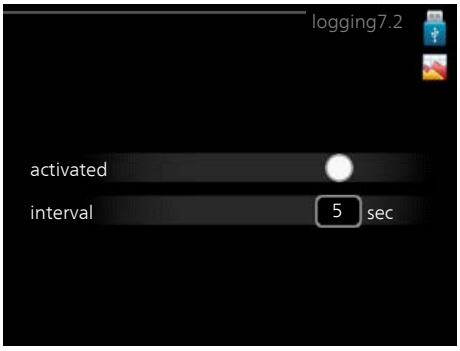


Setting range: 1 s – 60 min

Factory setting range: 5 s

Here you can choose how current measurement values from F1245 should be saved onto a log file on the USB memory.

1. Set the desired interval between loggings.
2. Tick "activated".
3. The present values from F1245 are saved in a file in the USB memory at the set interval until "activated" is unticked.

*Caution*

Untick "activated" before removing the USB memory.

*Logging floor drying*

Here you can save a floor drying log on the USB memory and in this way see when the concrete slab reached the correct temperature.

- Make sure that "floor drying function" is activated in menu 5.9.
- Select "logging floor drying activated".
- A log file is now created, where the temperature and the immersion heater output can be read off. Logging continues until "logging floor drying activated" is deselected or until "floor drying function" is stopped.

*Caution*

Deselect "logging floor drying activated" before you remove the USB memory.

## *Menu 7.3 - manage settings*

Here you can manage (save as or retrieve from) all the menu settings (user and service menus) in F1245 with a USB memory.

Via "save settings" you save the menu settings to the USB memory in order to restore them later or to copy the settings to another F1245.

> *Caution*
>
> When you save the menu settings to the USB memory you replace any previously saved settings on the USB memory.

Via "recover settings" you reset all menu settings from the USB memory.

> *Caution*
>
> Reset of the menu settings from the USB memory cannot be undone.

# 10 Disturbances in comfort

In most cases, F1245 notes a malfunction (a malfunction can lead to disruption in comfort) and indicates this with alarms, and instructions for action, in the display.

### INFO MENU

All the heat pump measurement values are gathered under menu 3.1 in the heat pump menu system. Looking through the values in this menu can often simplify finding the source of the fault. See help menu or user manual for more information about menu 3.1.

## Manage alarm

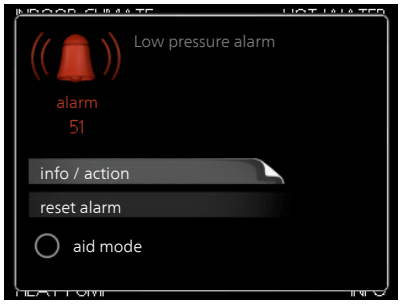


In the event of an alarm, some kind of malfunction has occurred, which is indicated by the status lamp changing from green continuously to red continuously. In addition, an alarm bell appears in the information window.

### ALARM

In the event of an alarm with a red status lamp a malfunction has occurred that the heat pump cannot remedy itself. In the display, by turning the control knob and pressing the OK button, you can see the type of alarm it is and reset it. You can also choose to set the heat pump to aid mode.

*info / action* Here you can read what the alarm means and receive tips on what you can do to correct the problem that caused the alarm.

*reset alarm* In many cases, it is sufficient to select “reset alarm” for the product to revert to normal operation. If a green light comes on after selecting “reset alarm”, the alarm has been remedied. If the red light is still on, and a menu called “alarm” is visible in the display, the problem causing the alarm still remains.

*aid mode* “aid mode” is a type of emergency mode. This means that the heat pump produces heat and/or hot water even though there is some kind of problem. This could mean that the heat pump’s compressor is not running. In this case, the immersion heater produces heat and/or hot water.

> *Caution*
> To select aid mode an alarm action must be selected in the menu 5.1.4.

> *Caution*
> Selecting "aid mode” is not the same as correcting the problem that caused the alarm. The status lamp will therefore continue to be red.

If the operational interference is not shown in the display the following tips can be used:

### BASIC ACTIONS

Start by checking the following items:

- The switch's (SF1) position.
- Group and main fuses of the accommodation.
- The property's earth circuit breaker.
- Miniature circuit breaker for F1245 (FC1).
- Correctly set load monitor (if current sensors installed).

### LOW HOT WATER TEMPERATURE OR NO HOT WATER

- F1245 in incorrect operating mode.
  - Enter menu 4.2. If mode "auto" is selected, select a higher value on "stop additional heat" in menu 4.9.2.
  - If mode "manual" is selected, select "addition".
- Large hot water consumption.
  - Wait until the hot water has heated up. Temporarily increased hot water capacity (temporary lux) can be activated in menu 2.1.
- Too low hot water setting.
  - Enter menu 2.2 and select a higher comfort mode.

- Too low or no operating prioritisation of hot water.
  - Enter menu 4.9.1 and increase the time for when hot water is to be prioritised. Note that if the time for hot water is increased, the time for heating production is reduced, which can give lower/uneven room temperatures.

## LOW ROOM TEMPERATURE

- Closed thermostats in several rooms.
  - Set the thermostats to max, in as many rooms as possible. Adjust the room temperature via menu 1.1, instead of choking the thermostats.
- Too low set value on the automatic heating control.
  - Enter menu 1.1 "temperature" and adjust the offset heating curve up. If the room temperature is only low in cold weather the curve slope in menu 1.9.1 "heating curve" needs adjusting up.
- F1245 in incorrect operating mode.
  - Enter menu 4.2. If mode "auto" is selected, select a higher value on "stop heating" in menu 4.9.2.
  - If mode "manual" is selected, select "heating". If this is not enough, select "addition".
- Too low or no operating prioritisation of heat.
  - Enter menu 4.9.1 and increase the time for when heating is to be prioritised. Note that if the time for heating is increased the time for hot water production is reduced, which can give smaller amounts of hot water.
- "Holiday mode" activated in menu 4.7.
  - Enter menu 4.7 and select "Off".
- External switch for changing the room heating activated.
  - Check any external switches.
- Air in the climate system.
  - Vent the climate system (see page 32).
- Closed valves to the climate system.
  - Open the valves.

## HIGH ROOM TEMPERATURE

- Too high set value on the automatic heating control.
  - Enter menu 1.1 (temperature) and reduce the offset heating curve. If the room temperature is only high in cold weather the curve slope in menu 1.9.1 "heating curve" needs adjusting down.
- External switch for changing the room heating activated.
  - Check any external switches.

## UNEVEN ROOM TEMPERATURE.

- Incorrectly set heating curve.
  - Fine-tune the heating curve in menu 1.9.1
- Too high set value on "dT at DOT"..
  - Enter menu 5.1.14 (flow set. climate system) and reduce the value of "dT at DOT".
- Uneven flow over the radiators.
  - Adjust the flow distribution between the radiators.

## LOW SYSTEM PRESSURE

- Not enough water in the climate system.
  - Top up the water in the climate system (see page 32).

## COMPRESSOR DOES NOT START

- There is no heating requirement.
  - F1245 does not call on heating or hot water.
- Compressor blocked due to the temperature conditions.
  - Wait until the temperature is within the product's working range.
- Minimum time between compressor starts has not been reached.
  - Wait for at least 30 minutes and then check if the compressor has started.
- Alarm tripped.
  - Follow the display instructions.

## WHINING NOISE IN THE RADIATORS

- Closed thermostats in the rooms and incorrectly set heating curve.
  - Set the thermostats to max. in as many rooms as possible. Adjust the heating curve via menu 1.1, instead of choking the thermostats.
- Circulation pump speed set too high.
  - Enter menu 5.1.11 (pump speed heating medium) and reduce the speed of the circulation pump.
- Uneven flow over the radiators.
  - Adjust the flow distribution between the radiators.

## GURGLING SOUND

This part of the troubleshooting chapter only applies if the NIBE FLM accessory is installed.

- Not enough water in the water seal.
  - Refill the water seal with water.

- Choked water seal.
  - Check and adjust the condensation water hose.

# 11 Accessories

Not all accessories are available on all markets.

## ACCESSORY CARD AXC 40

This accessory is used to enable connection and control of shunt controlled additional heat, step controlled additional heat, external circulation pump or ground water pump.

Part no. 067 060

## ACTIVE/PASSIVE COOLING HPAC 40

The accessory HPAC 40 is a climate exchange module that is to be included in a system with F1245.

Part no. 067 076

## ACTIVE/PASSIVE COOLING IN 4-PIPE SYSTEM ACS 45

Part no 067 195

## AUXILIARY RELAY HR 10

Auxiliary relay HR 10 is used to control external 1 to 3 phase loads such as oil burners, immersion heaters and pumps.

Part no 067 309

## BASE EXTENSION EF 45

This accessory is used to create a larger connection area under F1245.

Part no. 067 152

## BUFFER VESSEL UKV

UKV is an accumulator tank that is suitable for connection to a heat pump or another external heat source, and can have several different applications. It can also be used during external control of the heating system.

| *UKV 100* | *UKV 200* |
|---|---|
| Part no. 088 207 | Part no. 080 300 |

## COMMUNICATION MODULE FOR SOLAR ELECTRICITY EME 20

EME 20 is used to enable communication and control between inverters for solar cells from NIBE and F1245.

Part no. 057 188

## COMMUNICATIONS MODULE MODBUS 40

MODBUS 40 enables F1245 to be controlled and monitored using a DUC (computer sub-centre) in the building. Communication is then performed using MODBUS-RTU.

Part no 067 144

## COMMUNICATIONS MODULE SMS 40

When there is no internet connection, you can use the accessory SMS 40 to control F1245 via SMS.

Part no 067 073

## ENERGY MEASUREMENT KIT EMK 300

This accessory is installed externally and used to measure the amount of energy that is supplied for the pool, hot water, heating and cooling in the building.

Cu pipe Ø22.

Part no. 067 314

## EXHAUST AIR MODULE NIBE FLM

NIBE FLM is an exhaust air module designed to combine recovery of mechanical exhaust air with ground source heating.

| *NIBE FLM* | *Bracket BAU 40* |
|---|---|
| Part no. 067 011 | Part no. 067 666 |

## EXTERNAL ELECTRIC ADDITIONAL HEAT ELK

These accessories require accessories card AXC 40 (step controlled addition).

*ELK 5*

Electric heater
5 kW
Part no. 069 025

*ELK 8*

Electric heater
8 kW
Part no. 069 026

*ELK 15*

15 kW, 3 x 400 V
Part no. 069 022

*ELK 26*

26 kW, 3 x 400 V
Part no. 067 074

*ELK 42*

42 kW, 3 x 400 V
Part no. 067 075

*ELK 213*

7-13 kW, 3 x 400 V
Part no. 069 500

## EXTRA SHUNT GROUP ECS 40/ECS 41

This accessory is used when F1245 is installed in houses with two or more different heating systems that require different supply temperatures.

*ECS 40 (Max 80 m²)*

Part no 067 287

*ECS 41 (approx. 80-250 m²)*

Part no 067 288

## FILLING VALVE KIT KB 25/32

Valve kit for filling brine in the collector hose. Includes particle filter and insulation.

*KB 25 (max. 12 kW)*

Part no 089 368

*KB 32 (max. 30 kW)*

Part no 089 971

## FREE COOLING PCS 44

This accessory is used when F1245 is installed in an installation with passive cooling.

Part no 067 296

## GAS ACCESSORY

### *Communications module OPT 10*

OPT 10 is used to enable connection and control of gas boiler NIBE GBM 10-15.

Part no. 067 513

## HUMIDITY SENSOR HTS 40

This accessory is used to show and regulate humidity and temperatures during both heating and cooling operation.

Part no. 067 538

## LEVEL MONITOR NV 10

Level monitor for extended checks of the brine level.

Part no. 089 315

## PASSIVE COOLING PCM 40/42

PCM 40/42 makes it possible to obtain passive cooling from rock, groundwater or surface soil collectors.

Part no. 067 077 / 067 078

## POOL HEATING POOL 40

POOL 40 is used to enable pool heating with F1245.

Part no 067 062

## ROOM UNIT RMU 40

The room unit is an accessory that allows the control and monitoring of F1245 to be carried out in a different part of your home to where it is located.

Part no 067 064

## SOLAR PACKAGE NIBE PV

Solar panel package, 3 - 24 kW, (10 - 80 panels), which is used to produce your own electricity.

## VENTILATION HEAT EXCHANGER ERS

This accessory is used to supply the accommodation with energy that has been recovered from the ventilation air. The unit ventilates the house and heats the supply air as necessary.

*ERS 10-400*

Part no. 066 115

*ERS 20-250*

Part no. 066 068

## WATER HEATER/ACCUMULATOR TANK

*AHPS*

Accumulator tank without an immersion heater with solar coil (copper) and a hot water coil (stainless steel).

Part no. 056 283

*AHP*

Volume expansion vessel that is primarily used for expanding the volume together with AHPS.

Part no. 056 284

# 12 Technical data

## Dimensions and setting-out coordinates

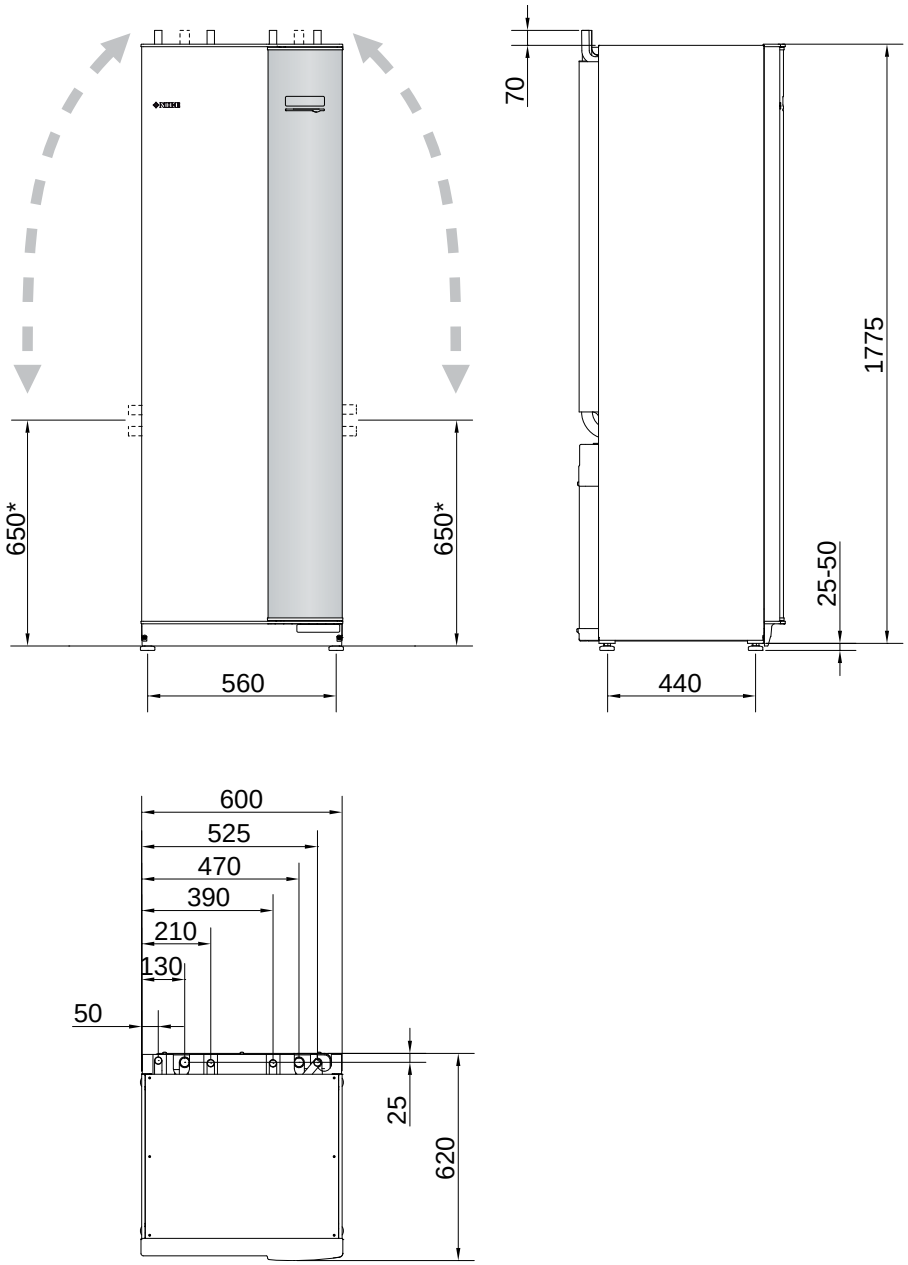


* This dimension applies at 90° angle on the brine pipes (side connection). The dimension can vary approx. ±100 mm vertically as the brine pipes consist in part of flexible pipes.

# Electrical data

## 3X400 V

| *F1245-6* | | |
|---|---|---|
| Rated voltage | | 400V 3N ~ 50Hz |
| Starting current | $A_{rms}$ | 13 |
| Max operating current including 0 kW immersion heater (Recommended fuse rating). | $A_{rms}$ | 5.3(16) |
| Max operating current including 1 – 2 kW immersion heater (Recommended fuse rating). | $A_{rms}$ | 13(16) |
| Max operating current including 3 – 4 kW immersion heater (Recommended fuse rating). | $A_{rms}$ | 13(16) |
| Max operating current including 5 – 6 kW immersion heater (Recommended fuse rating). | $A_{rms}$ | 17(20) |
| Max operating current including 7 kW immersion heater, connected on delivery (Recommended fuse rating). | $A_{rms}$ | 17(20) |
| Max operating current including 9 kW immersion heater, requires reconnection (Recommended fuse rating). | $A_{rms}$ | 20(20) |
| Additional power | kW | 1/2/3/4/5/6/7 (switchable to 2/4/6/9) |
| Output, Brine pump | W | 30 – 87 |
| Output, Heating medium pump | W | 7 – 67 |
| Enclosure class | | IPX1B |
| Equipment Compliant with IEC 61000-3-12 | | |
| For Connection Design Purposes, Compliant with IEC 61000-3-3 technical requirements | | |

| *F1245-8* | | |
|---|---|---|
| Rated voltage | | 400V 3N ~ 50Hz |
| Starting current | $A_{rms}$ | 16 |
| Max operating current including 0 kW immersion heater (Recommended fuse rating). | $A_{rms}$ | 6.4(16) |
| Max operating current including 1 – 2 kW immersion heater (Recommended fuse rating). | $A_{rms}$ | 14(16) |
| Max operating current including 3 – 4 kW immersion heater (Recommended fuse rating). | $A_{rms}$ | 14(16) |
| Max operating current including 5 – 6 kW immersion heater (Recommended fuse rating). | $A_{rms}$ | 18(20) |
| Max operating current including 7 kW immersion heater, connected on delivery (Recommended fuse rating). | $A_{rms}$ | 18(20) |
| Max operating current including 9 kW immersion heater, requires reconnection (Recommended fuse rating). | $A_{rms}$ | 21(25) |
| Additional power | kW | 1/2/3/4/5/6/7 (switchable to 2/4/6/9) |
| Output, Brine pump | W | 30 – 87 |
| Output, Heating medium pump | W | 7 – 67 |
| Enclosure class | | IPX1B |
| Equipment Compliant with IEC 61000-3-12 | | |
| For Connection Design Purposes, Compliant with IEC 61000-3-3 technical requirements | | |

| *F1245-10* | | |
|---|---|---|
| Rated voltage | | 400V 3N ~ 50Hz |
| Starting current | $A_{rms}$ | 21 |
| Max operating current including 0 kW immersion heater (Recommended fuse rating). | $A_{rms}$ | 8.3(16) |
| Max operating current including 1 – 2 kW immersion heater (Recommended fuse rating). | $A_{rms}$ | 15(16) |
| Max operating current including 3 – 4 kW immersion heater (Recommended fuse rating). | $A_{rms}$ | 15(16) |
| Max operating current including 5 – 6 kW immersion heater (Recommended fuse rating). | $A_{rms}$ | 19(20) |
| Max operating current including 7 kW immersion heater, connected on delivery (Recommended fuse rating). | $A_{rms}$ | 19(20) |
| Max operating current including 9 kW immersion heater, requires reconnection (Recommended fuse rating). | $A_{rms}$ | 22(25) |
| Additional power | kW | 1/2/3/4/5/6/7 (switchable to 2/4/6/9) |
| Output, Brine pump | W | 35 – 185 |
| Output, Heating medium pump | W | 7 – 67 |
| Enclosure class | | IPX1B |
| Equipment Compliant with IEC 61000-3-12 | | |
| For Connection Design Purposes, Compliant with IEC 61000-3-3 technical requirements | | |

| *F1245-12* | | |
|---|---|---|
| Rated voltage | | 400V 3N ~ 50Hz |
| Starting current | $A_{rms}$ | 29 |
| Max operating current including 0 kW immersion heater (Recommended fuse rating). | $A_{rms}$ | 9(16) |
| Max operating current including 1 – 2 kW immersion heater (Recommended fuse rating). | $A_{rms}$ | 18(20) |
| Max operating current including 3 – 4 kW immersion heater (Recommended fuse rating). | $A_{rms}$ | 18(20) |
| Max operating current including 5 – 6 kW immersion heater (Recommended fuse rating). | $A_{rms}$ | 18(20) |
| Max operating current including 7 kW immersion heater, connected on delivery (Recommended fuse rating). | $A_{rms}$ | 23(25) |
| Max operating current including 9 kW immersion heater, requires reconnection (Recommended fuse rating). | $A_{rms}$ | 24(25) |
| Additional power | kW | 1/2/3/4/5/6/7 (switchable to 2/4/6/9) |
| Output, Brine pump | W | 35 – 185 |
| Output, Heating medium pump | W | 7 – 67 |
| Enclosure class | | IPX1B |
| Equipment Compliant with IEC 61000-3-12 | | |
| For Connection Design Purposes, Compliant with IEC 61000-3-3 technical requirements | | |

# Technical specifications

## 3X400 V

| *Model* | | *F1245-6* | *F1245-8* | *F1245-10* | *F1245-12* |
|---|---|---|---|---|---|
| *Output data according to EN 14511* | | | | | |
| *0/35 nominal* | | | | | |
| Heating capacity ($P_H$) | kW | 5.69 | 7.93 | 10.09 | 11.48 |
| Supplied power ($P_E$) | kW | 1.27 | 1.70 | 2.19 | 2.51 |
| COP | | 4.47 | 4.67 | 4.60 | 4.57 |
| *0/45 nominal* | | | | | |
| Heating capacity ($P_H$) | kW | 5.33 | 7.50 | 9.55 | 10.99 |
| Supplied power ($P_E$) | kW | 1.52 | 2.03 | 2.63 | 3.02 |
| COP | | 3.51 | 3.69 | 3.63 | 3.64 |
| *SCOP according to EN 14825* | | | | | |
| Rated heating output ($P_{designh}$) | kW | 7 / 7 | 10 / 9 | 13 / 12 | 14 / 14 |
| SCOP cold climate, 35 °C / 55 °C | | 4.8 / 3.8 | 5.0 / 4.0 | 4.9 / 3.9 | 4.9 / 3.8 |
| SCOP average climate, 35 °C / 55 °C | | 4.7 / 3.7 | 4.9 / 3.9 | 4.8 / 3.8 | 4.8 / 3.7 |
| *Energy rating, average climate* | | | | | |
| The product's room heating efficiency class 35 °C / 55 °C [1] | | A+++ / A++ | A+++ / A++ | A+++ / A++ | A+++ / A++ |
| The system's room heating efficiency class 35 °C / 55 °C [2] | | A+++ / A++ | A+++ / A+++ | A+++ / A++ | A+++ / A++ |
| Efficiency class hot water heating / declared tap profile [3] | | A / XL | A / XL | A / XL | A / XL |
| *Noise* | | | | | |
| Sound power level $(L_{WA})_{EN\ 12102}$ at 0/35 | dB(A) | 41 | 38 | 42 | 43 |
| Sound pressure level ($L_{PA}$) calculated values according to EN ISO 11203 at 0/35 and 1 m range | dB(A) | 26 | 23 | 27 | 28 |
| *Refrigerant circuit* | | | | | |
| Type of refrigerant | | R407C | | | |
| GWP refrigerant | | 1,774 | | | |
| Fill amount | kg | 1.5 | 1.7 | 1.9 | 2.0 |
| $CO_2$ equivalent | ton | 2.66 | 3.02 | 3.37 | 3.55 |
| Cut-out value pressure switch HP / LP | MPa | 2.9 (29 bar) / 0.15 (1.5 bar) | | | |
| *Brine circuit* | | | | | |
| Min/max system pressure brine | MPa | 0.05 (0.5 bar) / 0.45 (4.5 bar) | | | |
| Min flow | l/s | 0.25 | 0.33 | 0.40 | 0.47 |
| Nominal flow | l/s | 0.30 | 0.42 | 0.51 | 0.65 |
| Max external avail. press at nom flow | kPa | 58 | 48 | 85 | 69 |
| Min/Max incoming Brine temp | °C | see diagram | | | |
| Min. outgoing brine temp. | °C | -12 | | | |
| *Heating medium circuit* | | | | | |
| Min/Max system pressure heating medium | MPa | 0.05 (0.5 bar) / 0.45 (4.5 bar) | | | |
| Min flow | l/s | 0.10 | 0.13 | 0.16 | 0.19 |
| Nominal flow | l/s | 0.13 | 0.18 | 0.22 | 0.27 |
| Max external avail. press at nom flow | kPa | 67 | 64 | 64 | 58 |
| Min/max HM-temp | °C | see diagram | | | |
| *Pipe connections* | | | | | |
| Brine ext diam. CU pipe | mm | 28 | 28 | 28 | 28 |
| Heating medium ext diam. CU pipes | mm | 22 | 22 | 22 | 28 |
| Hot water connection external diam | mm | 22 | | | |
| Cold water connection external diam | mm | 22 | | | |
| *Hot water and heating section* | | | | | |
| Volume coil (Cu / Rf / E)[4] | l | 2.0 / 7.8 / 4.8 | | | |
| Volume water heater (Cu / Rf / E) [4] | l | 178 / 176 / 178 | | | |
| Max pressure in water heater | MPa | 1.0 (10 bar) | | | |
| *Hot water heating capacity (comfort mode Normal) According to EN16147* | | | | | |
| Amount of hot water (40 °C) | l | 240 | 235 | 235 | 230 |
| $COP_{DHW}$ (load profile XL) | | 2.8 | 2.8 | 2.8 | 2.8 |
| *Dimensions and weight* | | | | | |
| Width x Depth x Height | mm | 600 x 620 x 1,800 | | | |
| Ceiling height [5] | mm | 1,950 | | | |
| Weight complete heat pump (Cu / Rf / E)[4] | kg | 230 / 210 / 245 | 240 / 220 / 255 | 245 / 225 / 260 | 260 / 240 / 275 |

| *Model* | | *F1245-6* | *F1245-8* | *F1245-10* | *F1245-12* |
|---|---|---|---|---|---|
| Weight only cooling module | kg | 100 | 105 | 111 | 126 |
| Substances according to Directive (EG) no. 1907/2006, article 33 (Reach) | | Lead in brass components | | | |
| Part number, 3x400 V, with energy meter (Cu / Rf / E)[4] | | - / 065 587 / 065 551 | - / 065 588 / 065 552 | - / 065 589 / 065 553 | - / 065 313 / 065 108 |
| Part number, 3x400 V (Cu / Rf / E)[4] | | 065 539 / 065 542 / 065 545 | 065 540 / 065 543 / 065 546 | 065 541 / 065 544 / 065 547 | 065 078 / 065 083 / 065 087 |

1 Scale for the product's efficiency class room heating: A+++ to D.
2 Scale for the system's efficiency class room heating: A+++ to G. Reported efficiency for the system takes the product's temperature regulator into account.
3 Scale for efficiency class hot water: A+ to F.
4 Cu: copper, Rf: stainless steel, E: enamel.
5 With feet removed, the height is approx. 1,930 mm.

## WORKING RANGE HEAT PUMP, COMPRESSOR OPERATION

The compressor provides a supply temperature up to 65 °C at 0 °C incoming brine temperature.

### *6 - 10 kW 3x400V*

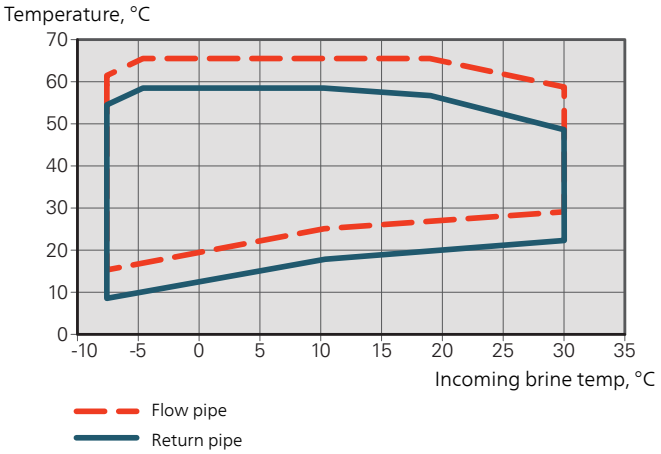


### *12 kW 3x400V*

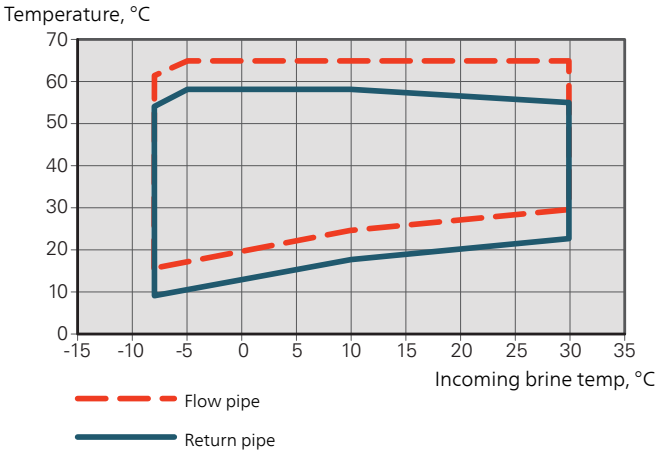

# Energy labelling

## INFORMATION SHEET

| *Supplier* | | *NIBE AB* | | | |
|---|---|---|---|---|---|
| *Model* | | *F1245-6* | *F1245-8* | *F1245-10* | *F1245-12* |
| *Temperature application* | *°C* | *35 / 55* | *35 / 55* | *35 / 55* | *35 / 55* |
| Declared load profile for water heating | | **XL** | **XL** | **XL** | **XL** |
| Seasonal space heating energy efficiency class, average climate | | **A+++ / A++** | **A+++ / A++** | **A+++ / A++** | **A+++ / A++** |
| Water heating energy efficiency class, average climate | | **A** | **A** | **A** | **A** |
| Rated heat output ($P_{designh}$), average climate | kW | 7 / 7 | 10 / 9 | 13 / 12 | 14 |
| Annual energy consumption space heating, average climate | kWh | 3,151 / 3,640 | 4,245 / 4,907 | 5,466 / 6,347 | 6,042 / 7,785 |
| Annual energy consumption water heating, average climate | kWh | 1,709 | 1,669 | 1,745 | 1,745 |
| Seasonal space heating energy efficiency, average climate | % | 178 / 140 | 187 / 147 | 184 / 144 | 183 / 141 |
| Water heating energy efficiency, average climate | % | 98 | 100 | 96 | 96 |
| Sound power level $L_{WA}$ indoors | dB | 42 | 42 | 42 | 45 |
| Rated heat output ($P_{designh}$), cold climate | kW | 7 / 7 | 10 / 9 | 13 / 12 | 14 |
| Rated heat output ($P_{designh}$), warm climate | kW | 7 / 7 | 10 / 9 | 13 / 12 | 14 |
| Annual energy consumption space heating, cold climate | kWh | 3,577 / 4,201 | 4,904 / 5,599 | 6,351 / 7,269 | 6,993 / 9,049 |
| Annual energy consumption water heating, cold climate | kWh | 1,709 | 1,669 | 1,745 | 1,745 |
| Annual energy consumption space heating, warm climate | kWh | 2,080 / 2,447 | 2,842 / 3,255 | 3,655 / 4,236 | 3,949 / 5,120 |
| Annual energy consumption water heating, warm climate | kWh | 1,709 | 1,669 | 1,745 | 1,745 |
| Seasonal space heating energy efficiency, cold climate | % | 185 / 145 | 193 / 152 | 189 / 149 | 189 / 145 |
| Water heating energy efficiency, cold climate | % | 98 | 100 | 96 | 96 |
| Seasonal space heating energy efficiency, warm climate | % | 177 / 138 | 186 / 146 | 182 / 143 | 181 / 138 |
| Water heating energy efficiency, warm climate | % | 98 | 100 | 96 | 96 |
| Sound power level $L_{WA}$ outdoors | dB | - | - | - | - |

## DATA FOR ENERGY EFFICIENCY OF THE PACKAGE

| *Model* | | *F1245-6* | *F1245-8* | *F1245-10* | *F1245-12* |
|---|---|---|---|---|---|
| *Temperature application* | *°C* | *35 / 55* | *35 / 55* | *35 / 55* | *35 / 55* |
| Controller, class | | VII | | | |
| Controller, contribution to efficiency | % | 3.5 | | | |
| Seasonal space heating energy efficiency of the package, average climate | % | 182 / 143 | 190 / 150 | 188 / 148 | 187 / 144 |
| Seasonal space heating energy efficiency class of the package, average climate | | A+++ / A++ | A+++ / A+++ | A+++ / A++ | A+++ / A++ |
| Seasonal space heating energy efficiency of the package, cold climate | % | 188 / 148 | 197 / 156 | 193 / 153 | 193 / 148 |
| Seasonal space heating energy efficiency of the package, warm climate | % | 181 / 142 | 189 / 150 | 186 / 147 | 185 / 142 |

The reported efficiency of the package also takes the controller into account. If an external supplementary boiler or solar heating is added to the package, the overall efficiency of the package should be recalculated.

# TECHNICAL DOCUMENTATION

| *Model* | | *F1245-6* | | | | | |
|---|---|---|---|---|---|---|---|
| Type of heat pump | | ☐ Air-water<br>☐ Exhaust-water<br>☒ Brine-water<br>☐ Water-water | | | | | |
| Low-temperature heat pump | | ☐ Yes ☒ No | | | | | |
| Integrated immersion heater for additional heat | | ☒ Yes ☐ No | | | | | |
| Heat pump combination heater | | ☒ Yes ☐ No | | | | | |
| Climate | | ☒ Average ☐ Cold ☐ Warm | | | | | |
| Temperature application | | ☒ Average (55 °C) ☐ Low (35 °C) | | | | | |
| Applied standards | | EN-14825, EN-16147 & EN12102 | | | | | |
| *Rated heat output* | Prated | 6,5 | kW | *Seasonal space heating energy efficiency* | $\eta_s$ | 140 | % |
| *Declared capacity for space heating at part load and at outdoor temperature Tj* | | | | *Declared coefficient of performance for space heating at part load and at outdoor temperature Tj* | | | |
| Tj = -7 °C | Pdh | 5.3 | kW | Tj = -7 °C | COPd | 3.16 | - |
| Tj = +2 °C | Pdh | 5.5 | kW | Tj = +2 °C | COPd | 3.75 | - |
| Tj = +7 °C | Pdh | 5.6 | kW | Tj = +7 °C | COPd | 4.12 | - |
| Tj = +12 °C | Pdh | 5.8 | kW | Tj = +12 °C | COPd | 4.53 | - |
| Tj = biv | Pdh | 5.4 | kW | Tj = biv | COPd | 3.32 | - |
| Tj = TOL | Pdh | 5.2 | kW | Tj = TOL | COPd | 2.93 | - |
| Tj = -15 °C (if TOL < -20 °C) | Pdh | | kW | Tj = -15 °C (if TOL < -20 °C) | COPd | | - |
| | | | | | | | |
| Bivalent temperature | $T_{biv}$ | -5 | °C | Min. outdoor air temperature | TOL | -10 | °C |
| Cycling interval capacity | Pcych | | kW | Cycling interval efficiency | COPcyc | | - |
| Degradation coefficient | Cdh | 1.00 | - | Max supply temperature | WTOL | 65 | °C |
| *Power consumption in modes other than active mode* | | | | *Additional heat* | | | |
| Off mode | $P_{OFF}$ | 0.002 | kW | Rated heat output | Psup | 1.3 | kW |
| Thermostat-off mode | $P_{TO}$ | 0 | kW | | | | |
| Standby mode | $P_{SB}$ | 0.007 | kW | Type of energy input | Electric | | |
| Crankcase heater mode | $P_{CK}$ | 0.014 | kW | | | | |
| *Other items* | | | | | | | |
| Capacity control | | Fixed | | Rated airflow (air-water) | | | $m^3/h$ |
| Sound power level, indoors/outdoors | $L_{WA}$ | 42 / - | dB | Nominal heating medium flow | | 0.56 | $m^3/h$ |
| Annual energy consumption | $Q_{HE}$ | 3,640 | kWh | Brine flow brine-water or water-water heat pumps | | 0.99 | $m^3/h$ |
| *For heat pump combination heater* | | | | | | | |
| *Declared load profile for water heating* | | XL | | *Water heating energy efficiency* | $\eta_{wh}$ | 98 | % |
| Daily energy consumption | $Q_{elec}$ | 7.78 | kWh | Daily fuel consumption | $Q_{fuel}$ | | kWh |
| Annual energy consumption | AEC | 1,709 | kWh | Annual fuel consumption | AFC | | GJ |
| Contact information | *NIBE Energy Systems – Box 14 – Hannabadsvägen 5 – 285 21 Markaryd – Sweden* | | | | | | |

| *Model* | | *F1245-8* | | | | | |
|---|---|---|---|---|---|---|---|
| Type of heat pump | | ☐ Air-water<br>☐ Exhaust-water<br>☒ Brine-water<br>☐ Water-water | | | | | |
| Low-temperature heat pump | | ☐ Yes ☒ No | | | | | |
| Integrated immersion heater for additional heat | | ☒ Yes ☐ No | | | | | |
| Heat pump combination heater | | ☒ Yes ☐ No | | | | | |
| Climate | | ☒ Average ☐ Cold ☐ Warm | | | | | |
| Temperature application | | ☒ Average (55 °C) ☐ Low (35 °C) | | | | | |
| Applied standards | | EN-14825, EN-16147 & EN12102 | | | | | |
| *Rated heat output* | Prated | 9,20 | kW | *Seasonal space heating energy efficiency* | $\eta_s$ | 147 | % |
| *Declared capacity for space heating at part load and at outdoor temperature Tj* | | | | *Declared coefficient of performance for space heating at part load and at outdoor temperature Tj* | | | |
| Tj = -7 °C | Pdh | 7.4 | kW | Tj = -7 °C | COPd | 3.31 | - |
| Tj = +2 °C | Pdh | 7.7 | kW | Tj = +2 °C | COPd | 3.93 | - |
| Tj = +7 °C | Pdh | 7.9 | kW | Tj = +7 °C | COPd | 4.30 | - |
| Tj = +12 °C | Pdh | 8.0 | kW | Tj = +12 °C | COPd | 4.73 | - |
| Tj = biv | Pdh | 7.5 | kW | Tj = biv | COPd | 3.49 | - |
| Tj = TOL | Pdh | 7.2 | kW | Tj = TOL | COPd | 3.09 | - |
| Tj = -15 °C (if TOL < -20 °C) | Pdh | | kW | Tj = -15 °C (if TOL < -20 °C) | COPd | | - |
| | | | | | | | |
| Bivalent temperature | $T_{biv}$ | -5 | °C | Min. outdoor air temperature | TOL | -10 | °C |
| Cycling interval capacity | Pcych | | kW | Cycling interval efficiency | COPcyc | | - |
| Degradation coefficient | Cdh | 1.00 | - | Max supply temperature | WTOL | 65 | °C |
| *Power consumption in modes other than active mode* | | | | *Additional heat* | | | |
| Off mode | $P_{OFF}$ | 0.002 | kW | Rated heat output | Psup | 2.0 | kW |
| Thermostat-off mode | $P_{TO}$ | 0 | kW | | | | |
| Standby mode | $P_{SB}$ | 0.007 | kW | Type of energy input | Electric | | |
| Crankcase heater mode | $P_{CK}$ | 0.014 | kW | | | | |
| *Other items* | | | | | | | |
| Capacity control | | Fixed | | Rated airflow (air-water) | | | $m^3/h$ |
| Sound power level, indoors/outdoors | $L_{WA}$ | 42 / - | dB | Nominal heating medium flow | | 0.79 | $m^3/h$ |
| Annual energy consumption | $Q_{HE}$ | 4,907 | kWh | Brine flow brine-water or water-water heat pumps | | 1.43 | $m^3/h$ |
| *For heat pump combination heater* | | | | | | | |
| *Declared load profile for water heating* | | XL | | *Water heating energy efficiency* | $\eta_{wh}$ | 100 | % |
| Daily energy consumption | $Q_{elec}$ | 7.60 | kWh | Daily fuel consumption | $Q_{fuel}$ | | kWh |
| Annual energy consumption | AEC | 1,669 | kWh | Annual fuel consumption | AFC | | GJ |
| Contact information | *NIBE Energy Systems – Box 14 – Hannabadsvägen 5 – 285 21 Markaryd – Sweden* | | | | | | |

| *Model* | | *F1245-10* | | | | | |
|---|---|---|---|---|---|---|---|
| Type of heat pump | | ☐ Air-water<br>☐ Exhaust-water<br>☒ Brine-water<br>☐ Water-water | | | | | |
| Low-temperature heat pump | | ☐ Yes ☒ No | | | | | |
| Integrated immersion heater for additional heat | | ☒ Yes ☐ No | | | | | |
| Heat pump combination heater | | ☒ Yes ☐ No | | | | | |
| Climate | | ☒ Average ☐ Cold ☐ Warm | | | | | |
| Temperature application | | ☒ Average (55 °C) ☐ Low (35 °C) | | | | | |
| Applied standards | | EN-14825, EN-16147 & EN12102 | | | | | |
| *Rated heat output* | Prated | 11,70 | kW | *Seasonal space heating energy efficiency* | $\eta_s$ | 144 | % |
| *Declared capacity for space heating at part load and at outdoor temperature Tj* | | | | *Declared coefficient of performance for space heating at part load and at outdoor temperature Tj* | | | |
| Tj = -7 °C | Pdh | 9.3 | kW | Tj = -7 °C | COPd | 3.25 | - |
| Tj = +2 °C | Pdh | 9.7 | kW | Tj = +2 °C | COPd | 3.85 | - |
| Tj = +7 °C | Pdh | 9.9 | kW | Tj = +7 °C | COPd | 4.23 | - |
| Tj = +12 °C | Pdh | 10.1 | kW | Tj = +12 °C | COPd | 4.65 | - |
| Tj = biv | Pdh | 9.4 | kW | Tj = biv | COPd | 3.42 | - |
| Tj = TOL | Pdh | 9.2 | kW | Tj = TOL | COPd | 3.03 | - |
| Tj = -15 °C (if TOL < -20 °C) | Pdh | | kW | Tj = -15 °C (if TOL < -20 °C) | COPd | | - |
| | | | | | | | |
| Bivalent temperature | $T_{biv}$ | -5 | °C | Min. outdoor air temperature | TOL | -10 | °C |
| Cycling interval capacity | Pcych | | kW | Cycling interval efficiency | COPcyc | | - |
| Degradation coefficient | Cdh | 1.00 | - | Max supply temperature | WTOL | 65 | °C |
| *Power consumption in modes other than active mode* | | | | *Additional heat* | | | |
| Off mode | $P_{OFF}$ | 0.002 | kW | Rated heat output | Psup | 2.5 | kW |
| Thermostat-off mode | $P_{TO}$ | 0 | kW | | | | |
| Standby mode | $P_{SB}$ | 0.007 | kW | Type of energy input | Electric | | |
| Crankcase heater mode | $P_{CK}$ | 0.014 | kW | | | | |
| *Other items* | | | | | | | |
| Capacity control | | Fixed | | Rated airflow (air-water) | | | $m^3/h$ |
| Sound power level, indoors/outdoors | $L_{WA}$ | 42 / - | dB | Nominal heating medium flow | | 1.01 | $m^3/h$ |
| Annual energy consumption | $Q_{HE}$ | 6,347 | kWh | Brine flow brine-water or water-water heat pumps | | 1.80 | $m^3/h$ |
| *For heat pump combination heater* | | | | | | | |
| *Declared load profile for water heating* | | XL | | *Water heating energy efficiency* | $\eta_{wh}$ | 96 | % |
| Daily energy consumption | $Q_{elec}$ | 7.95 | kWh | Daily fuel consumption | $Q_{fuel}$ | | kWh |
| Annual energy consumption | AEC | 1,745 | kWh | Annual fuel consumption | AFC | | GJ |
| Contact information | *NIBE Energy Systems – Box 14 – Hannabadsvägen 5 – 285 21 Markaryd – Sweden* | | | | | | |

| *Model* | | *F1245-12* | | | | | |
|---|---|---|---|---|---|---|---|
| Type of heat pump | | ☐ Air-water<br>☐ Exhaust-water<br>☒ Brine-water<br>☐ Water-water | | | | | |
| Low-temperature heat pump | | ☐ Yes ☒ No | | | | | |
| Integrated immersion heater for additional heat | | ☒ Yes ☐ No | | | | | |
| Heat pump combination heater | | ☒ Yes ☐ No | | | | | |
| Climate | | ☒ Average ☐ Cold ☐ Warm | | | | | |
| Temperature application | | ☒ Average (55 °C) ☐ Low (35 °C) | | | | | |
| Applied standards | | EN-14825 & EN-16147 | | | | | |
| *Rated heat output* | Prated | 14,0 | kW | *Seasonal space heating energy efficiency* | $\eta_s$ | 141 | % |
| *Declared capacity for space heating at part load and at outdoor temperature Tj* | | | | *Declared coefficient of performance for space heating at part load and at outdoor temperature Tj* | | | |
| Tj = -7 °C | Pdh | 10.8 | kW | Tj = -7 °C | COPd | 3.30 | - |
| Tj = +2 °C | Pdh | 11.1 | kW | Tj = +2 °C | COPd | 3.80 | - |
| Tj = +7 °C | Pdh | 11.3 | kW | Tj = +7 °C | COPd | 4.10 | - |
| Tj = +12 °C | Pdh | 11.5 | kW | Tj = +12 °C | COPd | 4.40 | - |
| Tj = biv | Pdh | 10.9 | kW | Tj = biv | COPd | 3.46 | - |
| Tj = TOL | Pdh | 10.7 | kW | Tj = TOL | COPd | 3.12 | - |
| Tj = -15 °C (if TOL < -20 °C) | Pdh | | kW | Tj = -15 °C (if TOL < -20 °C) | COPd | | - |
| | | | | | | | |
| Bivalent temperature | $T_{biv}$ | -4.2 | °C | Min. outdoor air temperature | TOL | -10 | °C |
| Cycling interval capacity | Pcych | | kW | Cycling interval efficiency | COPcyc | | - |
| Degradation coefficient | Cdh | 0.99 | - | Max supply temperature | WTOL | 65 | °C |
| *Power consumption in modes other than active mode* | | | | *Additional heat* | | | |
| Off mode | $P_{OFF}$ | 0.002 | kW | Rated heat output | Psup | 3.3 | kW |
| Thermostat-off mode | $P_{TO}$ | 0.018 | kW | | | | |
| Standby mode | $P_{SB}$ | 0.007 | kW | Type of energy input | Electric | | |
| Crankcase heater mode | $P_{CK}$ | 0.030 | kW | | | | |
| *Other items* | | | | | | | |
| Capacity control | | Fixed | | Rated airflow (air-water) | | | $m^3/h$ |
| Sound power level, indoors/outdoors | $L_{WA}$ | 45 / - | dB | Nominal heating medium flow | | 1.15 | $m^3/h$ |
| Annual energy consumption | $Q_{HE}$ | 7,785 | kWh | Brine flow brine-water or water-water heat pumps | | 2.18 | $m^3/h$ |
| *For heat pump combination heater* | | | | | | | |
| *Declared load profile for water heating* | | XL | | *Water heating energy efficiency* | $\eta_{wh}$ | 96 | % |
| Daily energy consumption | $Q_{elec}$ | 7.95 | kWh | Daily fuel consumption | $Q_{fuel}$ | | kWh |
| Annual energy consumption | AEC | 1,745 | kWh | Annual fuel consumption | AFC | | GJ |
| Contact information | *NIBE Energy Systems – Box 14 – Hannabadsvägen 5 – 285 21 Markaryd – Sweden* | | | | | | |

# Item register


**A**
Accessibility, electrical connection, 22
Accessories, 69
Alarm, 66
Assembly, 7

**B**
Back button, 38
Brine side, 18

**C**
Cable lock, 23
Cold and hot water, 19
  Connecting cold and hot water, 19
Commissioning and adjusting, 32
  Filling and venting, 32
  Post adjustment and bleeding, 34
  Preparations, 32
  Start guide, 33
Connecting accessories, 30
Connecting current sensors, 27
Connecting external operating voltage for the control system, 24
Connecting the climate system, 18
Connections, 23
Control, 38, 43
  Control - Introduction, 38
  Control - Menus, 43
Control - Introduction, 38
  Display unit, 38
  Menu system, 39
Control knob, 38
Controlling ground water pump, 30
Control - Menus, 43
  Menu 5 - SERVICE, 46
Cooling mode indication, 30
Cooling section, 14

**D**
Data for energy efficiency of the system, 75
Delivery and handling, 7
  Assembly, 7
  Drawing out the cooling module, 7
  Installation area, 7
  Removing parts of the insulation, 9
  Removing the covers, 8
  Supplied components, 8
  Transport, 7
Dimensions and pipe connections, 17
Dimensions and setting-out coordinates, 71
Display, 38
Display unit, 38
  Back button, 38
  Control knob, 38
  Display, 38
  OK button, 38
  Status lamp, 38
  Switch, 38
Disturbances in comfort, 66
  Alarm, 66
  Manage alarm, 66
  Troubleshooting, 66
Docking alternatives, 19
  Free cooling, 20
  Ground water system, 19
  Neutralization vessel, 19
  Pool, 20
  Two or more climate systems, 20
  Ventilation recovery, 20
Draining the climate system, 60
Draining the hot water heater, 60
Drawing out the cooling module, 7, 62

**E**
Electrical addition - maximum output, 25
  Setting max electrical output, 25
  Switching to maximum electrical output, 25
Electrical cabinets, 12
Electrical connections, 21
  Accessibility, electrical connection, 22
  Cable lock, 23
  Connecting accessories, 30
  Connecting external operating voltage for the control system, 24
  Connections, 23
  Electrical addition - maximum output, 25
  External connection options, 28
  General, 21
  Load monitor, 27
  Master/Slave, 26
  Miniature circuit-breaker, 21
  Motor cut-out, 22
  NIBE Uplink, 28
  Optional connections, 26
  Outdoor sensor, 24
  Power connection, 23
  Removing the cover, base board, 22

Removing the cover, immersion heater circuit board, 22
Removing the hatch, input circuit board, 22
Room sensor, 24
Settings, 25
Standby mode, 25
Temperature limiter, 21
Temperature sensor, external flow line, 24
Emptying the brine system, 61
Energy labelling, 75
Data for energy efficiency of the package, 75
Information sheet, 75
Technical documentation, 76
External connection options, 28
Controlling ground water pump, 30
Cooling mode indication, 30
Extra circulation pump, 30
Hot water circulation, 30
Possible selection for AUX inputs, 29
Possible selection for AUX output (potential free variable relay), 30
Extra circulation pump, 30

**F**

Filling and venting, 32
Filling and venting the brine system, 32
Filling and venting the climate system, 32
Filling the hot water heater, 32
Filling and venting the brine system, 32
Filling and venting the climate system, 32
Filling the hot water heater, 32

**H**

Heating medium side, 18
Connecting the climate system, 18
Helping the circulation pump to start, 61
Help menu, 42
Hot water circulation, 30

**I**

Important information, 4
Recovery, 5
Information sheet, 75
Inspection of the installation, 6
Installation alternative
Water heater with immersion heater, 19
Installation area, 7

**M**

Manage alarm, 66
Marking, 4
Menu 5 - SERVICE, 46
Menu system, 39
Help menu, 42
Operation, 41
Scroll through the windows, 42
Selecting menu, 41
Selecting options, 41
Setting a value, 41
Use the virtual keyboard, 42
Miniature circuit-breaker, 21
Motor cut-out, 22

**N**

NIBE Uplink, 28

**O**

OK button, 38
Operation, 41
Optional connections, 26
Outdoor sensor, 24

**P**

Pipe connections, 16
Brine side, 18
Cold and hot water
Connecting cold and hot water, 19
Dimensions and pipe connections, 17
Docking alternatives, 19
General, 16
Heating medium side, 18
Pipe dimensions, 17
Symbol key, 16
System diagram, 17
Pipe dimensions, 17
Possible selection for AUX inputs, 29
Possible selection for AUX output (potential free variable relay), 30
Post adjustment and bleeding, 34
Pump adjustment, automatic operation, 34
Pump adjustment, manual operation, 34
Pump capacity diagram, brine side, manual operation, 34
Readjusting, venting, heat medium side, 35–36
Power connection, 23
Preparations, 32
Pump adjustment, automatic operation, 34
Brine side, 34
Heating medium side, 34
Pump adjustment, manual operation, 34
Heating medium side, 35
Pump capacity diagram, brine side, manual operation, 34

**R**

Readjusting, venting, heat medium side, 35–36
Remove parts of the insulation, 9
Removing the cover, base board, 22
Removing the cover, immersion heater circuit board, 22
Removing the covers, 8
Removing the hatch, input circuit board, 22
Room sensor, 24

**S**

Safety information
Inspection of the installation, 6
Marking, 4
Serial number, 5
Symbols, 4
Scroll through the windows, 42
Selecting menu, 41
Selecting options, 41
Serial number, 5

Service, 59
Service actions, 59
Service actions, 59
Draining the climate system, 60
Draining the hot water heater, 60
Drawing out the cooling module, 62
Emptying the brine system, 61
Helping the circulation pump to start, 61
Standby mode, 59
Temperature sensor data, 62
USB service outlet, 63
Setting a value, 41
Settings, 25
Standby mode, 59
Power in emergency mode, 26
Start guide, 33
Status lamp, 38
Supplied components, 8
Switch, 38
Symbol key, 16
Symbols, 4
System diagram, 17

**T**

Technical data, 71
Dimensions and setting-out coordinates, 71
Energy labelling, 75
Data for energy efficiency of the system, 75
Information sheet, 75
Technical documentation, 76
Technical Data, 73
Technical Data, 73
Working range heat pump, 74
Technical documentation, 76
Temperature limiter, 21
Resetting, 21
Temperature sensor, external flow line, 24
Temperature sensor data, 62
The heat pump design, 10
Component list cooling section, 14
Component list electrical cabinets, 12
Component location cooling section, 14
Component location electrical cabinets, 12
Component locations, 10
List of components, 10
Transport, 7
Troubleshooting, 66

**U**

USB service outlet, 63
Use the virtual keyboard, 42

**W**

Working range heat pump, 74

# Contact information

*AUSTRIA*

KNV Energietechnik GmbH
Gahberggasse 11, 4861 Schörfling
Tel: +43 (0)7662 8963-0
mail@knv.at
knv.at

*CZECH REPUBLIC*

Družstevní závody Dražice - strojírna s.r.o.
Dražice 69, 29471 Benátky n. Jiz.
Tel: +420 326 373 801
nibe@nibe.cz
nibe.cz

*DENMARK*

Vølund Varmeteknik A/S
Industrivej Nord 7B, 7400 Herning
Tel: +45 97 17 20 33
info@volundvt.dk
volundvt.dk

*FINLAND*

NIBE Energy Systems Oy
Juurakkotie 3, 01510 Vantaa
Tel: +358 (0)9 274 6970
info@nibe.fi
nibe.fi

*FRANCE*

NIBE Energy Systems France SAS
Zone industrielle RD 28
Rue du Pou du Ciel, 01600 Reyrieux
Tél: 04 74 00 92 92
info@nibe.fr
nibe.fr

*GERMANY*

NIBE Systemtechnik GmbH
Am Reiherpfahl 3, 29223 Celle
Tel: +49 (0)5141 75 46 -0
info@nibe.de
nibe.de

*GREAT BRITAIN*

NIBE Energy Systems Ltd
3C Broom Business Park,
Bridge Way, S41 9QG Chesterfield
Tel: +44 (0)845 095 1200
info@nibe.co.uk
nibe.co.uk

*NETHERLANDS*

NIBE Energietechniek B.V.
Energieweg 31, 4906 CG Oosterhout
Tel: +31 (0)168 47 77 22
info@nibenl.nl
nibenl.nl

*NORWAY*

ABK AS
Brobekkveien 80, 0582 Oslo
Tel: (+47) 23 17 05 20
post@abkklima.no
nibe.no

*POLAND*

NIBE-BIAWAR Sp. z o.o.
Al. Jana Pawla II 57, 15-703 Bialystok
Tel: +48 (0)85 66 28 490
biawar.com.pl

*RUSSIA*

EVAN
bld. 8, Yuliusa Fuchika str.
603024 Nizhny Novgorod
Tel: +7 831 419 57 06
kuzmin@evan.ru
nibe-evan.ru

*SWEDEN*

NIBE Energy Systems
Box 14
Hannabadsvägen 5, 285 21 Markaryd
Tel: +46 (0)433-27 3000
info@nibe.se
nibe.se

*SWITZERLAND*

NIBE Wärmetechnik c/o ait Schweiz AG
Industriepark, CH-6246 Altishofen
Tel. +41 (0)58 252 21 00
info@nibe.ch
nibe.ch

For countries not mentioned in this list, contact NIBE Sweden or check nibe.eu for more information.

NIBE Energy Systems
Hannabadsvägen 5
Box 14
SE-285 21 Markaryd
info@nibe.se
nibe.eu

IHB EN 2004-1 531675

This manual is a publication from NIBE Energy Systems. All product illustrations, facts and data are based on the available information at the time of the publication's approval.
NIBE Energy Systems makes reservations for any factual or printing errors in this manual.

©2020 NIBE ENERGY SYSTEMS

531675